DIRECTORATE OF WATER SUPPLY
DIRECTORATE GENERAL CIPTA KARYA
MINISTRY OF PUBLIC WORKS
REPUBLIC OF INDONESIA

DIRECTORATE GENERAL
INTERNATIONAL COOPERATION
MINISTRY OF FOREIGN AFFAIRS
KINGDOM OF THE NETHERLANDS

MDP PRODUCTION TEAM

TRAINING MATERIALS FOR WATER ENTERPRISES

VOLUME 5B

	GUIDE FOR USERS OF TRAINING MATERIALS	
●	TRAINING MODULES	
		GENERAL
		ORGANISATIONAL
		Basic knowledge / skills
		Processes/procedures
		Equipment/materials
	●	TECHNICAL
		Basic knowledge/skills
	●	Processes/procedures
		withdrawal
		treatment
		distribution
		consumption
		Equipment/materials
	TAPE / SLIDE PROGRAMMES	

MDP PRODUCTION TEAM

DHV - IWACO - TGI

DIRECTORATE OF WATER SUPPLY
DIRECTORATE GENERAL CIPTA KARYA
DEPARTMENT OF PUBLIC WORKS
GOVERNMENT OF INDONESIA

DIRECTORATE GENERAL
FOR INTERNATIONAL COOPERATION
MINISTRY OF FOREIGN AFFAIRS
GOVERNMENT OF THE NETHERLANDS

MDP PRODUCTION TEAM

TRAINING MATERIALS FOR WATER ENTERPRISES

VOLUME 5B
TRAINING MODULES
TECHNICAL (processes/procedures)

DHV CONSULTING ENGINEERS
IWACO B.V.
T.G. INTERNATIONAL

JAKARTA
APRIL 1985

P R E F A C E

This volume is part of the Final Report of the MDP Production Team which produced Training Materials for Water Enterprises as part of a project under the bilateral cooperation programme between the Government of the Republic of Indonesia and the Government of the Kingdom of the Netherlands.

This Final Report contains the following volumes:

Volume 1	Guide for users of training materials	
Volume 2A	Training Modules,	GENERAL + ORGANIZATIONAL (basic knowledge/skills)
Volume 2B	Training Modules,	GENERAL + ORGANIZATIONAL (basic knowledge/skills)
Volume 3	Training Modules,	ORGANIZATIONAL (processes/procedures; equipment/materials)
Volume 4	Training Modules,	TECHNICAL (basic knowledge/skills)
Volume 5A	Training Modules,	TECHNICAL (processes/procedures)
Volume 5B	Training Modules,	TECHNICAL (processes/procedures)
Volume 6A	Training Modules,	TECHNICAL (Withdrawal + Treatment)
Volume 6B	Training Modules,	TECHNICAL (Withdrawal + Treatment)
Volume 7	Training Modules,	TECHNICAL (Distribution + Consumption)
Volume 8	Training Modules,	TECHNICAL (equipment/materials)
Volume 9	Tape/slide programmes	

TABLE OF CONTENTS

TRAINING MODULES

Module : PIPE CUTTING, ASBESTOS-CEMENT PIPE	Code : TPC 152
	Edition : 20-09-1984
Section 1 : INFORMATION SHEET	Page : 01 of 01/05

Duration :	45 minutes.
Training objectives :	After the session the trainees will be able to: - list the two methods for cutting AC pipe; - use both methods.
Trainee selection :	- Pipelayer; - Pipeline Inspector; - Construction Supervisor.
Training aids :	- A.C. pipe length; - Masonry saw; - Mechanical pipe cutter for AC pipe; - Measuring tape (10 m); - Chalk; - Viewfoils : TPC 152/V 1; - Handout : TPC 152/H 1.
Special features :	-
Keywords :	Pipe cutting/AC pipe.

Module : PIPE CUTTING, uPVC PIPES	Code : TPC 151 Edition : 19-09-1984
Section 2 : S E S S I O N N O T E S	Page : 01 of 01
1. Introduction	
- Basically there are two methods of cutting uPVC pipe, using:	
a. saw;	Show saw
b. mechnanical cutter.	Show mechanical cutter
2. Saw cut method	
- Important to measure accurately where pipe is to be cut.	Demonstrate
- Mark pipe where cut has to be made.	
- Cut pipe using saw.	
- Make sure cut is at 90° angle to the axis of the pipe.	Let trainees practice
3. Mechanical cutter	
- There are many types of commercially produced cutters but the basic principles are the same for each.	Show V 1 Show mechanical cutter Explain operation
- Important to measure accurately where the pipe is to be cut.	Demonstrate
- Mark pipe.	
- Fix mechanical cutter to the pipe.	
- Rotate cutter and cut.	
- Observe instructions for particular cutter in use.	Let trainees practice
4. Safety	
- Safety precautions with saw.	
- Safety precautions with mechanical cutter.	
5. Summary	Give H 1

Module : PIPE CUTTING, uPVC PIPES	Code : TPC 151
	Edition : 19-09-1984
Section 3 : T R A I N I N G A I D S	Page : 01 of 01

Pipe cutter TPC 151/V 1

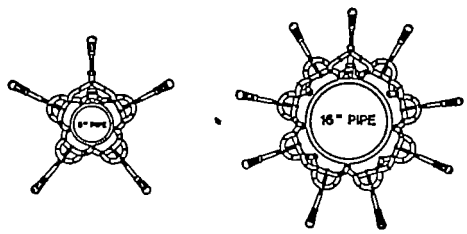

Pipe cutting, uPVC pipes TPC 151/H 1

1. INTRODUCTION

Basically there are only two methods of cutting uPVC pipes:
a. with a saw;
b. with a mechanical cutter.
Each one achieves the objective of cutting the pipe where required.

2. SAW CUT METHOD

Before making any cut on any pipe it is essential to mark the pipe where the cut is to be made.
Use a measuring tape and mark the pipe with chalk exactly where the cut should be made.
Use a fine-toothed saw to cut the pipe at the mark but make sure that the cut is at 90° to the axis of the pipe.

3. MECHANICAL CUTTER

There are many types of commercially produced mechanical cutters available for cutting uPVC pipe but essentially the basic principles for cutting the pipe are the same.

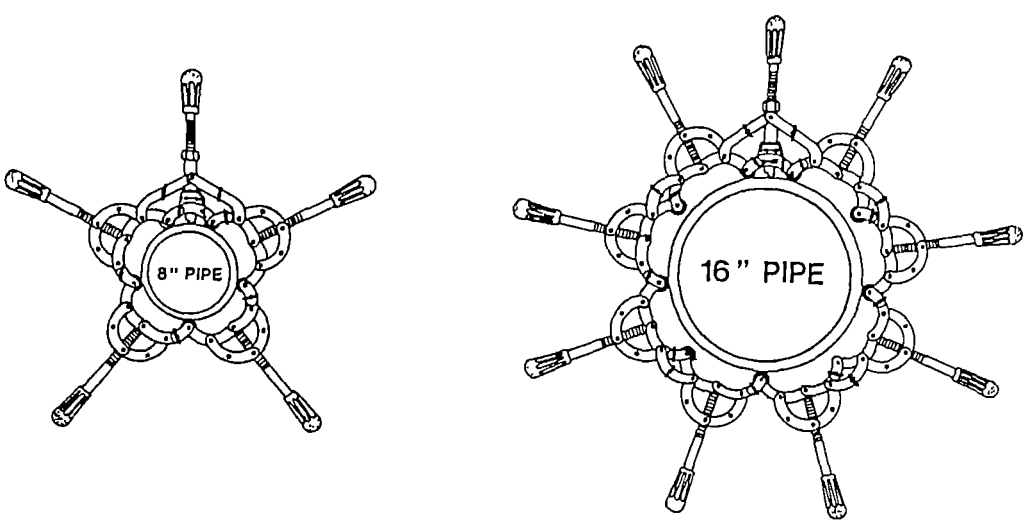

Fig. 1. Pipe cutter for larger-diameter pipes.

The cutter normally has three or four rotating cutting wheels located in a frame which clamps around the outside of the pipe. The diameter of this frame is adjustable, usually by way of the turning handle.

The length of pipe must be correctly marked at the place where the cut is to be made. Fix the mechanical cutter to the pipe and rotate it, gradually increasing the tension on the handle to cut deeper into the uPVC pipe. It is most important to make this adjustment slowly as the cutter tends to jam and distort the uPVC pipe if the adjustment is too rapid.
This method is relatively quick for cutting uPVC pipe.

4. SAFETY

All reasonable safety precautions should be observed when using the saw and the cutter as their cutting edges are sharp.
Although uPVC pipe is relatively light in weight, long lengths when dropped can cause considerable damage to human beings.

5. SUMMARY

There are two basic methods of cutting uPVC pipes :
a. saw cutting
b. mechanical cutters
At all times safety precautions should be observed.

* * *

TITLE :	CODE :
1. Pipe cutter	TPC 151/V 1

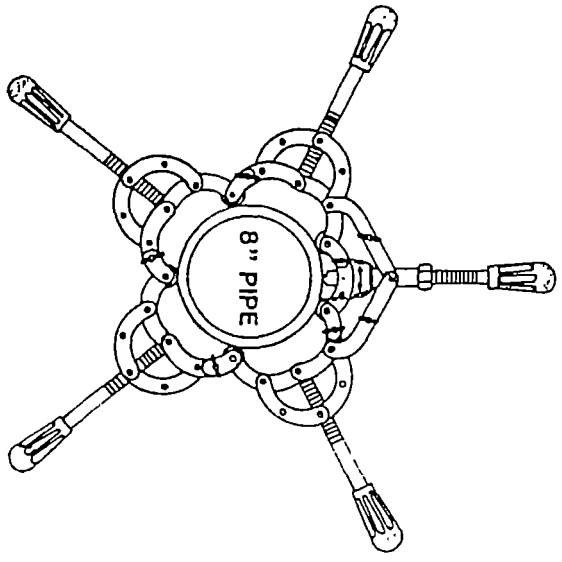
8" PIPE

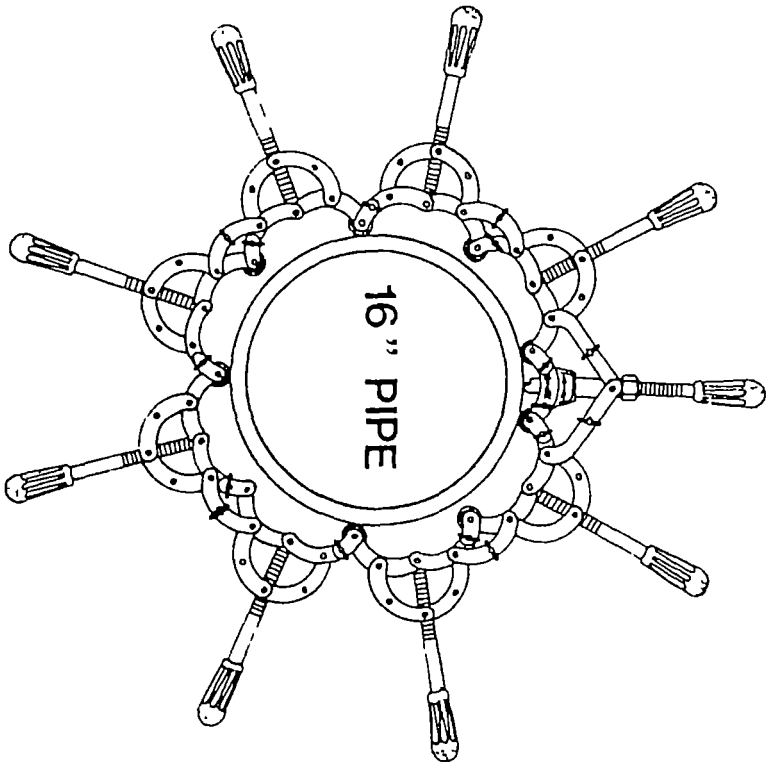
16" PIPE

Module : PIPE CUTTING, uPVC PIPES	Code : TPC 151
	Edition : 19-09-1984
Section 1 : INFORMATION SHEET	Page : 01 of 01/05

Duration :	90 minutes.
Training objectives :	After the session the trainees will be able to: - list the two methods for cutting uPVC pipe; - use both methods.
Trainee selection :	- Pipelayer; - Pipeline Inspector; - Construction Supervisor.
Training aids :	- uPVC pipe lengths; - Mechanical pipe cutter for uPVC pipe; - Saw; - Measuring tape (10 m); - Chalk; - Viewfoil : TPC 151/V 1; - Handout : TPC 151/H 1.
Special features :	-
Keywords :	Pipe cutting/uPVC pipe.

Module : PIPE CUTTING, ASBESTOS-CEMENT PIPE	Code : TPC 152 Edition : 20-09-1984
Section 2 : S E S S I O N N O T E S	Page : 01 of 01
1. Introduction	
- Basically there are two methods of cutting AC pipe: a. masonry saw; b. mechanical cutter.	Show masonry saw Show mechanical cutter
2. Masonry saw	
- Important to measure accurately where pipe is to be cut. - Mark pipe with chalk. - Cut pipe with saw. - Cut to be at the right angle to the axis of the pipe	Demonstrate
CAUTION : DO NOT INHALE ASBESTOS CEMENT DUST	
3. Mechanical cutter	
- Many types of cutter commercially available but the basic principles are the same.	Show V 1 Show mechanical cutter
- Important to measure accurately where pipe pipe is to be cut. - Mark pipe with chalk. - Fix mechanical cutter to the pipe. - Rotate cutter to cut pipe. - Observe instructions for particular cutter.	Demonstrate and explain method
CAUTION : DO NOT INHALE ASBESTOS CEMENT DUST	Let trainees practice
4. Safety	
- Safety percautions with masonry saw. - Safety precautions with mechanical cutter.	Explain safety precautions
CAUTION : DO NOT INHALE ASBESTOS CEMENT DUST	
5. Summary	Give H 1

Module : PIPE CUTTING, ASBESTOS-CEMENT PIPE	Code : TPC 152
	Edition : 20-09-1984
Section 3 : T R A I N I N G A I D S	Page : 01 of 01

Pipe cutters TPC 152/V 1

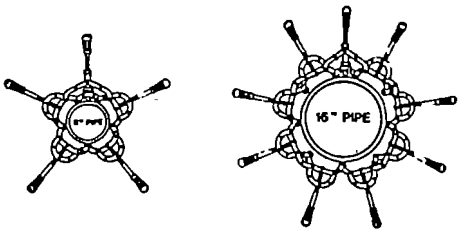

Pipe cutting, asbestos cement pipe TPC 152/H 1

1. INTRODUCTION

There are two methods of cutting AC pipe, using either :
a. masonry saw, or
b. mechanical cutter.

Both methods require a correct marking of the point where the pipe is to be cut.

2. MASONRY SAW METHOD

Measure correctly the point where the pipe is to be cut and mark with chalk.
Cut the pipe using a special masonry saw as used for cutting brick work etc.
It is essential that the pipe is cut at a right angle to its axis.

CAUTION : DO NOT INHALE ASBESTOS CEMENT DUST.

3. MECHANICAL CUTTER

There are many types of mechanical cutter commercially available but the principles of operation are basically the same for all.

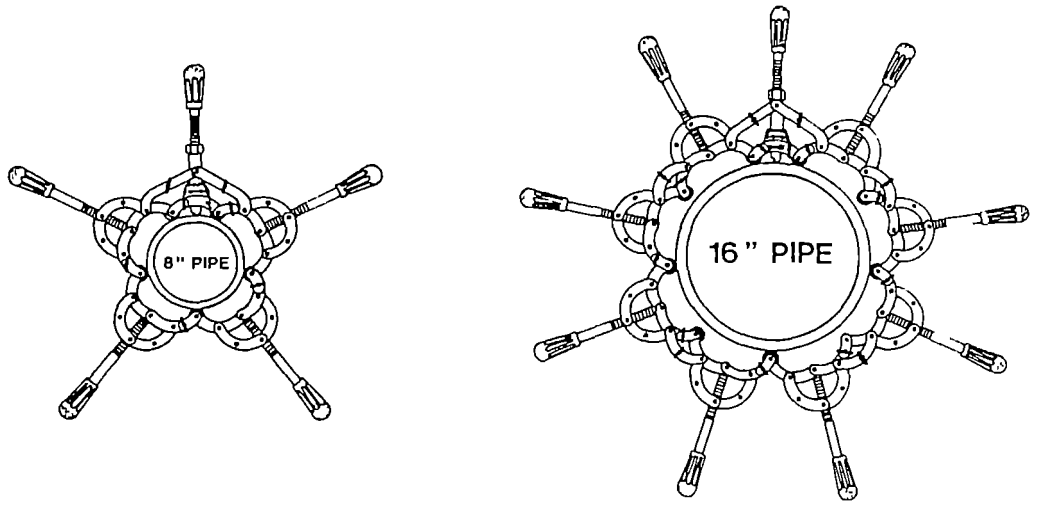

Fig. 1. Pipe cutter for larger-size pipes

The cutter is essentially a circular clamp with an adjustable cutting blade. The clamp is fixed to the pipe and the blade is lowered progressively on to the pipe. The cutting blade is rotated gradually, cutting through the pipe with a constant, even adjustment.
It is important to remember that the actual cut is normally about 6 mm wide so care should be taken with marking the pipe cut and cutting to the outside edge of the mark.
Accurately mark where the cut should be made and clamp the cutter to the pipe. Rotate the cutter and cut progressively through the pipe.

CAUTION : DO NOT INHALE ASBESTOS CEMENT DUST.

4. SAFETY

The most important thing about asbestos cement when cut is that it releases large quantities of very fine asbestos fibres which are exceedingly dangerous if they are inhaled and have been known to cause asbestosis and emphysema.
Moreover, asbestos cement pipe is relatively heavy and can cause severe injuries if dropped on someone.

5. SUMMARY

There are two methods of cutting AC pipe, using :
a. masonry saw;
b. mechanical cutter.

They can be used effectively provided that the normal safety precautions are taken.

* * *

TITLE :	CODE :
1. Pipe cutter	TPC 152/V 1

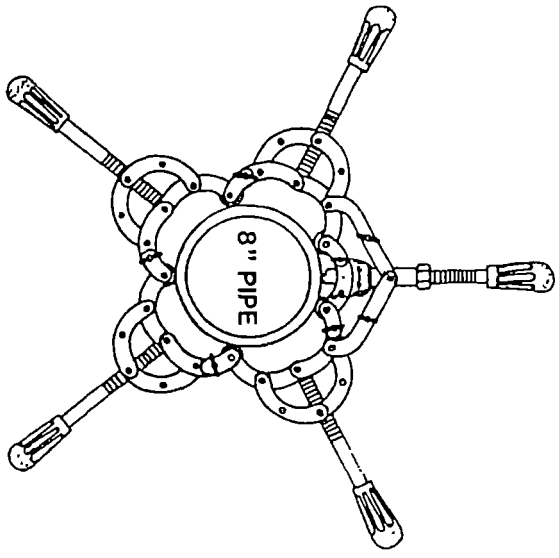
8" PIPE

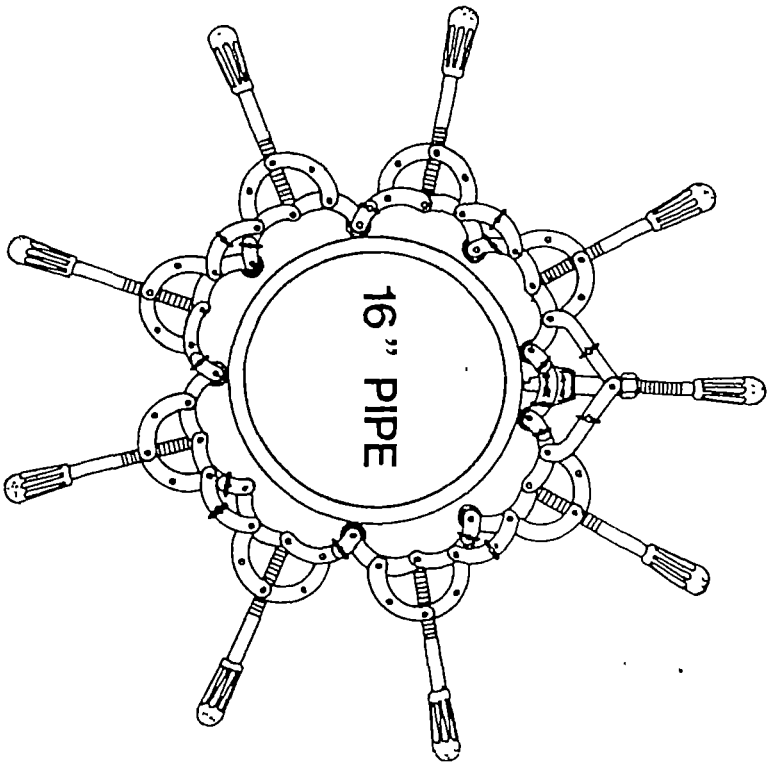
16" PIPE

Module : PIPE CUTTING, G.I. PIPE	Code : TPC 153
	Edition : 21-09-1984
Section 1 : INFORMATION SHEET	Page : 01 of 01/05

Duration :	90 minutes.
Training objectives :	After the session the trainees will be able to: - list the two methods of cutting G.I. pipe; - use both methods.
Trainee selection :	- Pipelayer; - Pipeline Instructor; - Construction Supervisor.
Training aids :	- Metal saw; - Pipe cutter; - Measuring tape; - Pipes of Galvanised Iron Pipe; - Viewfoils : TPC 153/V 1; - Handout : TPC 153/H 1.
Special features :	-
Keywords :	Pipe cutting/GI pipe.

Module : PIPE CUTTING, G.I. PIPE	Code : TPC 153
	Edition : 21-09-1984
Section 2 : S E S S I O N N O T E S	Page : 01 of 01

1. **Introduction**	
- There are basically two methods of cutting GI pipe: a. metal saw; b. mechanical cutter.	Use whiteboard
2. **Metal saw method**	
- The correct method is: . measure accurately where pipe is to be cut and mark with chalk or saw mark; . fix pipe in vice, being careful not to damage the galvanising on pipe; . cut pipe with saw.	Demonstrate and explain method Show V 1 Let trainees practice
3. **Mechanical cutter method**	
- The correct method to use a mechanical cutter is: . measure accurately where pipe is to be cut and mark with chalk or saw mark; . fix pipe in vice, being careful not to damage the galvanising on the pipe; . fix mechanical cutter to pipe; . rotate cutter to cut pipe; . adjust cutting depth of cutting wheels progressively.	Let trainees practice
4. **Summary**	Give H 1

Module : PIPE CUTTING, G.I. PIPE	Code : TPC 153
	Edition : 21-09-1984
Section 3 : T R A I N I N G A I D S	Page : 01 of 01

Measuring length to be cut TPC 153/V 1

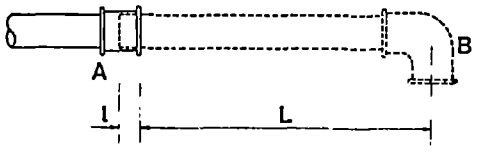

Pipe cutting, GI pipe TPC 153/H 1

1. INTRODUCTION

Galvanised iron pipe is basically an iron pipe which has been treated or "galvanised" as a form of protection against corrosion.
There are essentially two ways of cutting GI pipe:
a. steel saw method;
b. mechanical cutter method.

2. STEEL SAW METHOD

First, the pipe length to be cut should be measured accurately and account must be made of the fact that, when jointed, the ends of the pipe must be threaded in most cases.

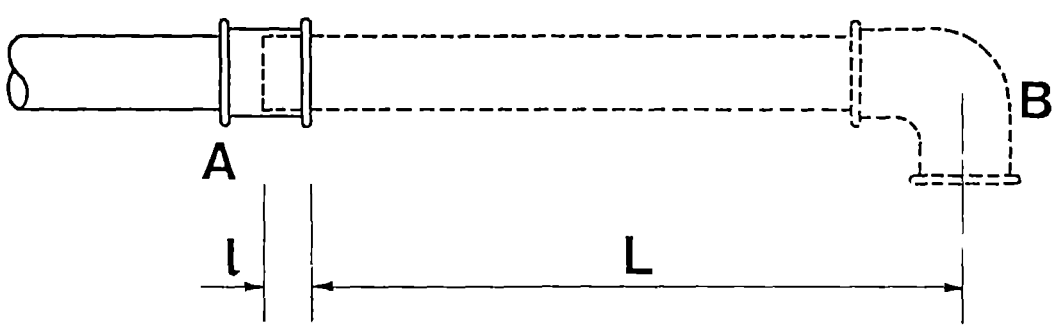

Fig. 1. Measuring the length to be cut.

A pipe has been fixed up to point A, where it terminates with a socket. It is intended that it will continue as a straight pipeline, before a 90° bend at point C.

Length of pipe required from axis of bend to existing socket = L + (allowance for threading).

The pipe should be marked at the point of cutting with either chalk or a saw mark and then fixed in a vice. Caution should be exercised so as not to damage the galvanisation on the pipe.
The pipe may then be cut with a metal saw.
When cut, the end of the pipe should be filed to remove any sharp edges.

3. MECHANICAL CUTTER METHOD

Again the pipe length to be cut should be measured and marked accurately (see 2 above).
The pipe should then be fixed in a vice as above and the mechanical cutter clamped on to the pipe.
There are many types of mechanical cutter commercially available but all work on the same principle, viz. a set of 3 or 4 cutting wheels held within a frame produce a cutting action when rotated around the circumference of the pipe.
Rotate the cutter around the pipe to cut it.
The end of the pipe should be filed flat to remove sharp edges.

4. SUMMARY

There are basically 2 ways of cutting galvanised iron pipe:
a. steel saw method;
b. mechanical cutter method.

* * *

TITLE :	CODE :
1. Measuring length to be cut	TPC 153/V 1

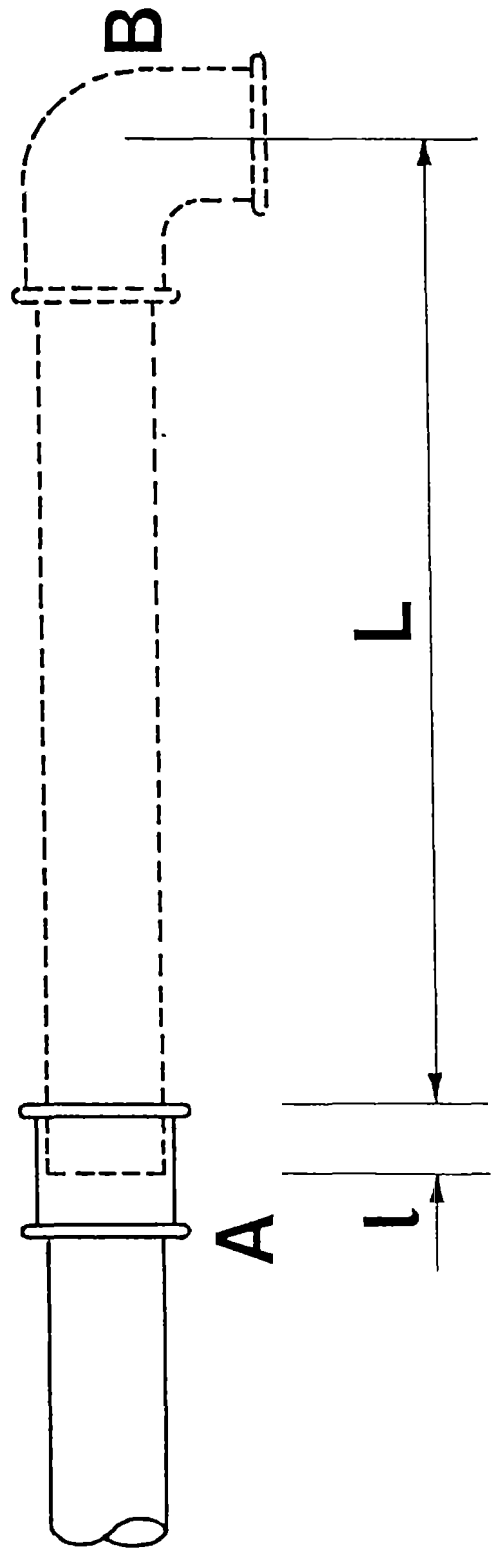
B
L
A
l

Module : PIPE CUTTING, GREY CAST IRON PIPE	Code : TPC 155
	Edition : 19-09-1984
Section I : INFORMATION SHEET	Page : 01 of 01/10

Duration :	90 minutes.
Training objectives :	After the session the trainees will be able to: - list the 4 methods of cutting grey cast iron pipe; - use all of these methods.
Trainee selection :	- Pipelayer; - Pipeline Inspectors; - Construction Supervisor.
Training aids :	- Measuring tape (10 m); - Chalk; - Hammer; - Chisel; - Steel saw; - Mechanical pipe cutter; - Hydraulic pipe cutter; - Lengths of (grey) cast iron pipe; - Viewfoils : TPC 155/V 1; - Handout : TPC 155/H 1.
Special features :	-
Keywords :	Pipe cutting/cast iron pipe.

1. Introduction	
- Essentially there are four methods of cutting grey cast iron pipe: a. steel saw; b. chisel and hammer (controlled fracture); c. mechanical cutter (controlled fracture); d. hydraulic cutter (controlled fracture).	Use whiteboard
2. Steel saw method	
- Important to measure accurately where the pipe is to be cut. - The correct procedure is: . measure where pipe is to be cut; . mark with chalk; . cut pipe with steel saw; cut to be at right angle to the axis of the pipe. CAUTION: METAL EDGES ARE SHARP.	Demonstrate and explain method
3. Chisel and hammer method	
- Important to measure accurately where the pipe is to be cut. - The correct procedure is: . measure where pipe is to be cut; . mark around circumference of the pipe; . chisel progressively around the circumference of the pipe ; . continue chiseling until approximately 30% through the thickness of the pipe wall. CAUTION : This method of pipe cutting involves the use of a CONTROLLED fracture of the pipe. After approximately 30% of the wall thickness has been cut through the pipe will fracture around the circumference.	Demonstrate and explain method Let trainees practice

4. Mechanical cutter	
- There are many types of mechanical cutters available commercially but the basic principles of operation are the same for all. - Important to measure accurately where the pipe is to be cut.	Show small-size cutter Show V 1
- The correct procedure is: . measure where pipe is to be cut; . mark with chalk; . fix mechanical cutter on to pipe following instructions for particular cutter; . rotate cutter to cut pipe; . do not tighten cutter.	Demonstrate and explain methods
CAUTION : This method of pipe cutting involves the CONTROLLED fracture of the pipe. After approximately 30% of the wall thickness has been cut through, the pipe will fracture around the circumference.	Let trainees practice
5. Hydraulic pipe cutter	
- There are several types of hydraulic cutter available commercially but the same basic principles operation apply to all. - Important to measure accurately where the pipe is to be cut.	Emphasize safety Demonstrate and explain method
- The correct procedure is: . measure where the pipe is to be cut; . mark pipe with chalk; . fix hydraulic cutter to pipe following instructions for particular cutter; . cut pipe (controlled fracture).	
CAUTION : INSTRUCTOR AND TRAINEES MUST STAND TO THE SIDE OF THE PIPE DURING THE DEMONSTRATION AND PRACTICE SESSIONS AS THE PIPE SEPARATES WITH A JOLT WHEN CUT.	Let trainees practice

6. **Safety**

- Safety practices should be summarized.

NOTE :
It is important to include safety points with each demonstration.

7. **Summary**

Give H 1

Module : PIPE CUTTING, GREY CAST IRON PIPE	Code : TPC 155
	Edition : 19-09-1984
Section 3 : T R A I N I N G A I D S	Page : 01 of 01

Pipe cutters TPC 155/V 1
(large-diameter pipe)

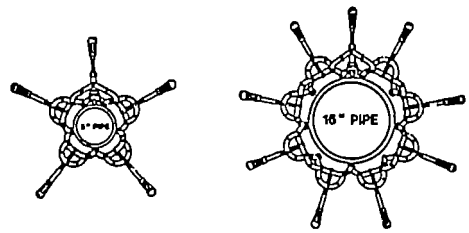

Pipe cutting, TPC 155/H 1
grey cast iron pipe

1. INTRODUCTION

Essentially there are four basic methods of cutting grey cast iron pipe using:
a. steel saw;
b. chisel and hammer (controlled fracture);
c. mechanical cutter (controlled fracture);
d. hydraulic cutter (controlled fracture).

2. STEEL SAW METHOD

It is very important to measure accurately where the pipe has to be cut, using a measuring tape and marking chalk.
With a steel saw, cut the pipe at a right angle to the axis of the pipe.

CAUTION : METAL EDGES OF THE PIPE ARE SHARP.

This method is particulary time consuming.

3. CHISEL AND HAMMER METHOD (see Fig. 1.)

The pipe should be measured accurately for the position of the cut. It is essential to mark the cut around the whole of the circumference of the pipe.
Chisel progressively around the circumference of the pipe until approximately 30% through the thickness of the pipe wall.
With this method of pipe cutting the pipe is not really cut but the stresses built up surrounding the chisel mark around the circumference of the cut are such that after the wall thickness has been reduced by 30% the pipe will fracture along this line.
It is extremely important to note that the edges of the pipe when cut in this manner are very rough and sharp.

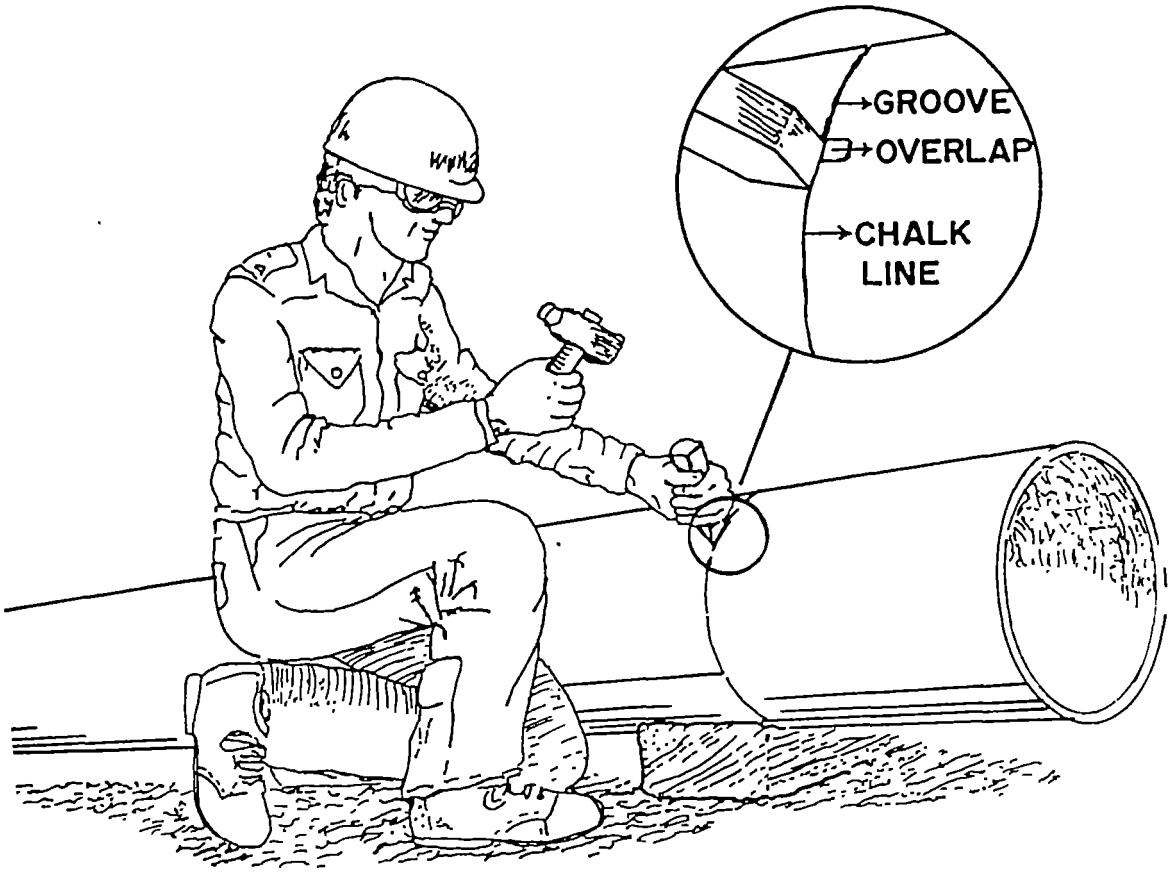

Fig. 1. Chisel and hammer method

4. MECHANICAL CUTTER

Many mechanical cutters are presently commercially available for cutting grey cast iron but the basic principles of operation are the same. It is important to measure accurately where the pipe is to be cut. Fix the mechanical cutter on the pipe. Most mechanical cutters consist of a circular frame in which adjustable high tensile steel cutting discs are set. The cutter is rotated for approximately 1/4 of the circumference of the pipe moving it forwards and backwards and the cutting edges are adjusted gradually downwards.
The cutting edges, when about 30% through the wall thickness of the pipe, produce a controlled fracture rather than a full cut.

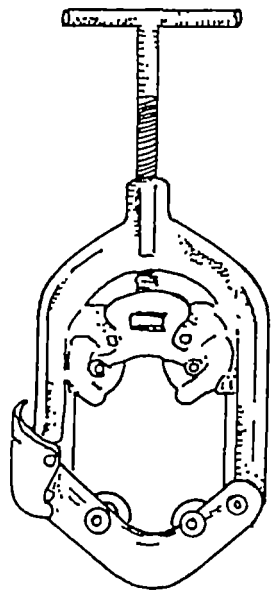

Fig. 2. Mechanical cutter for small-size cast iron pipe

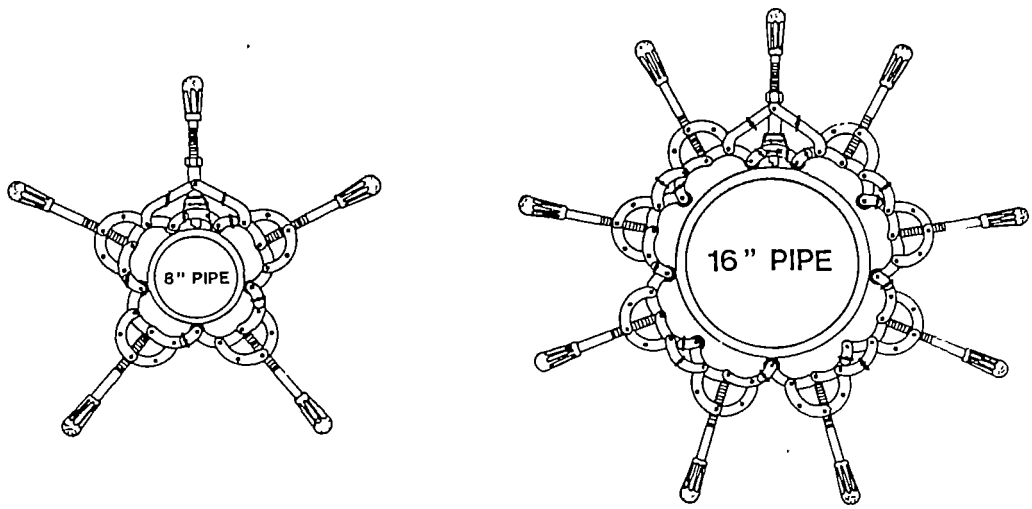

Fig. 3. Pipe cutter for large-diameter pipe

5. HYDRAULIC PIPE CUTTER

There are several types of hydraulic cutter commercially available but principally the operation is the same in each case.
The pipe cutter is normally a heavy duty chain in which a series of high tensile steel cutting discs are set. The chain is fixed around the pipe and clamped to both sides of a hydraulic unit. When the unit is pumped the chain is tightened around the pipe and the cutting discs are pressed into the pipe. Consequently, the higher the hydraulic pressure the deeper the cutting discs cut into the pipe.

This again is a controlled fracture of the pipe but caution must be exercised by the trainers and trainees, who should stand to the side of the hydraulic unit when cutting as the cut pipe has a tendency to jolt when the controlled fracture occurs.

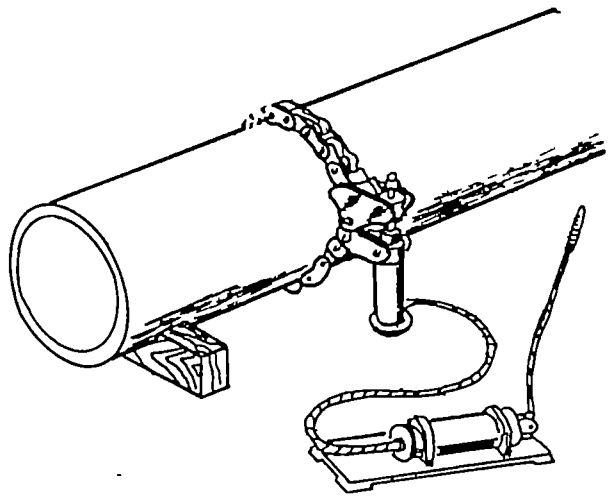

Fig. 4. Hydraulic pipe cutter

6. SAFETY

It is important to remember that when cut, grey cast iron pipe produces very sharp edges which can be dangerous. Moreover, grey cast iron pipe is relatively heavy and can easily cause injuries when dropped.

7. SUMMARY

There are four basic methods of cutting grey cast iron pipe, using:
a. steel saw;
b. chisel and hammer (controlled fracture);
c. mechanical cutter (controlled fracture);
d. hydraulic cutter (controlled fracture).
When using any of these methods, safety precautions should be exercised.

* * *

TITLE :	CODE :
1. Pipe cutter	TPC 155/V 1

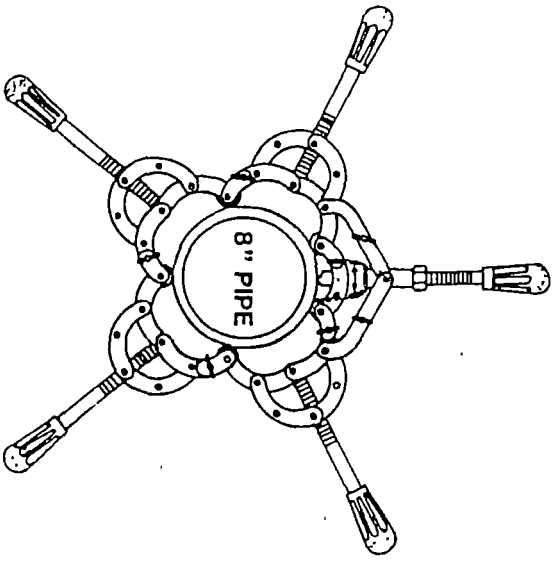
8" PIPE

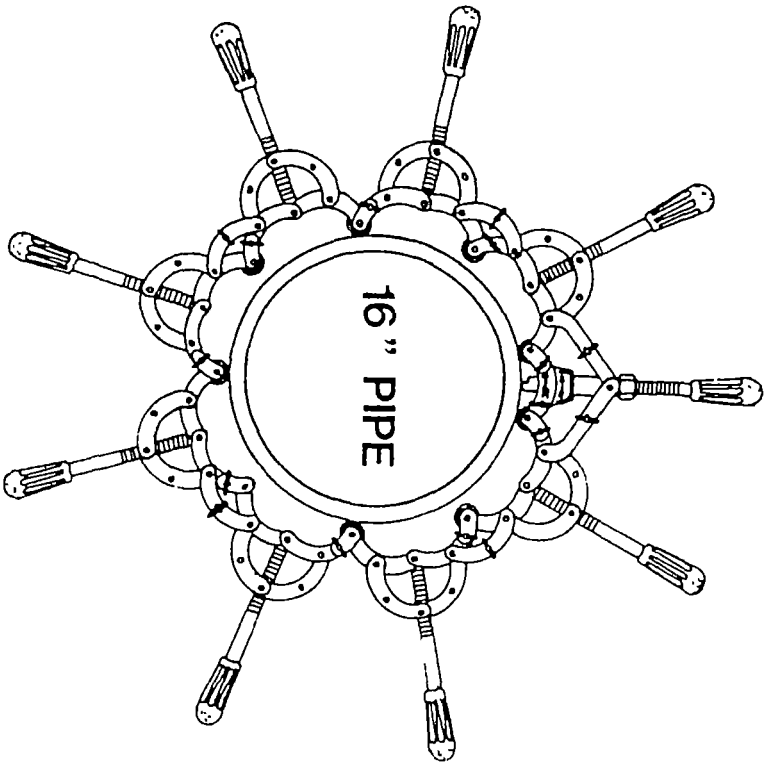
16" PIPE

Module : PIPE CUTTING, DUCTILE IRON PIPE	Code : TPC 156
	Edition : 20-09-1984
Section 1 : INFORMATION SHEET	Page : 01 of 01/09

Duration :	90 minutes.
Training objectives :	After the session the trainees will be able to: - list the 4 basic methods of cutting ductile iron pipe; - use all of these methods.
Trainee selection :	- Pipelayer; - Pipeline Inspector; - Construction Supervisor.
Training aids :	- Measuring tape (10 m); - Chalk; - Hammer; - Chisel; - Steel saw; - Mechanical pipe cutter; - Hydraulic pipe cutter; - Lengths of ductile iron pipe; - Viewfoils : TPC 156/V 1; - Handout : TPC 156/H 1.
Special features :	-
Keywords :	Pipe cutting/ductile iron pipe.

1. Introduction	
- Essentially there are four basic methods of cutting ductile iron pipe, using a: a. steel saw; b. chisel and hammer (controlled fracture); c. mechanical cutter (controlled fracture); d. hydraulic cutter (controlled fracture).	Use whiteboard
2. Steel saw method	
- Important to measure accurately where the pipe is to be cut. - Mark pipe with chalk. - Cut pipe with steel saw. - Cut to be at right angle to the axis of the pipe.	Demonstrate and explain method
CAUTION : METAL EDGES ARE SHARP	Let trainees practice
3. Chisel and hammer method	
- Important to measure accurately where the pipe is to be cut. - Measure where pipe is to be cut. - Mark around the circumference of the pipe; - Chisel progressively around the circumference of the pipe; - Continue chiseling until approximately 30% through the thickness of the pipe wall.	Demonstrate and explain method:
CAUTION : This method of pipe cutting involves the use of a CONTROLLED fracture of the pipe. After approximately 30% of the wall thickness has been cut through the pipe will fracture around the circumference.	Let trainees practice
4. Mechanical cutter	
- There are many types of mechanical cutters available commercially but the basic principles of operation is the same for all.	Show small-size cutter Show V 1 Demonstrate and explain method

- Important to measure accurately where the pipe is to be cut. - Mark with chalk. - Fix mechanical cutter on to pipe following instructions for particular cutter. - Rotate cutter to cut pipe. - Do not overtighten cutter. CAUTION : This method of pipe cutting involves the CONTROLLED fracture of the pipe. After approximately 30% of the wall thickness has been cut through, the pipe will fracture around the circumference.	Let trainees practice
5. **Hydraulic pipe cutter**	
- There are several types of hydraulic pipe cutter available commercially but the same basic principles of operation apply to all.	Explain Emphasize safety
- Important to measure accurately where the pipe is to be cut. - Mark pipe with chalk. - Fix hydraulic cutter to pipe following instructions for particular cutter. - Cut pipe (controlled fracture).	Demonstrate and explain method
CAUTION - INSTRUCTOR AND TRAINEES MUST STAND TO THE SIDE OF THE PIPE DURING THE DEMONSTRATION AND PRACTICE SESSIONS AS THE PIPE SEPARATES WITH A JOLT WHEN CUT.	Let trainees practice
6. **Safety**	
- Safety practices should be summarized. NOTE : It is important to include safety points in each demonstration.	Explain safety points
7. **Summary**	Give H 1

Module : PIPE CUTTING, DUCTILE IRON PIPE	Code : TPC 156
	Edition : 20-09-1984
Section 3 : T R A I N I N G A I D S	Page : 01 of 01

Pipe cutters (large-diameter pipe) TPC 156/V 1 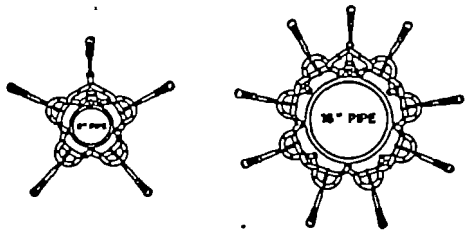	
	Pipe cutting, ductile iron pipe TPC 156/H 1

1. INTRODUCTION

Essentially there are four basic methods of cutting ductile iron pipe using :
a. steel saw;
b. chisel and hammer (controlled fracture);
c. mechanical cutter (controlled fracture);
d. hydraulic cutter (controlled fracture).

2. STEEL SAW METHOD

It is very important to measure accurately where the pipe is to be cut.
Use a measuring tape and marking chalk.
With a steel saw, cut the pipe at a right angle to its axis.

CAUTION : METAL EDGES OF THE PIPE ARE SHARP

This method is particulary time consuming for this type of pipe.

3. CHISEL AND HAMMER METHOD

The pipe should be measured accurately for the position of the cut. It is essential to mark the cut around the whole of the circumference of the pipe.

Chisel progressively around the circumference of the pipe until approximately 30% through the thickness of the pipe wall.
With this method of pipe cutting the pipe is not really cut but the stresses built up surrounding the chisel mark around the circumference of the cut are such that after the wall thickness has been reduced by 30% the pipe will fracture along this line.
It is extremely important to note that the edges of the pipe when cut in this manner are very rough and sharp.

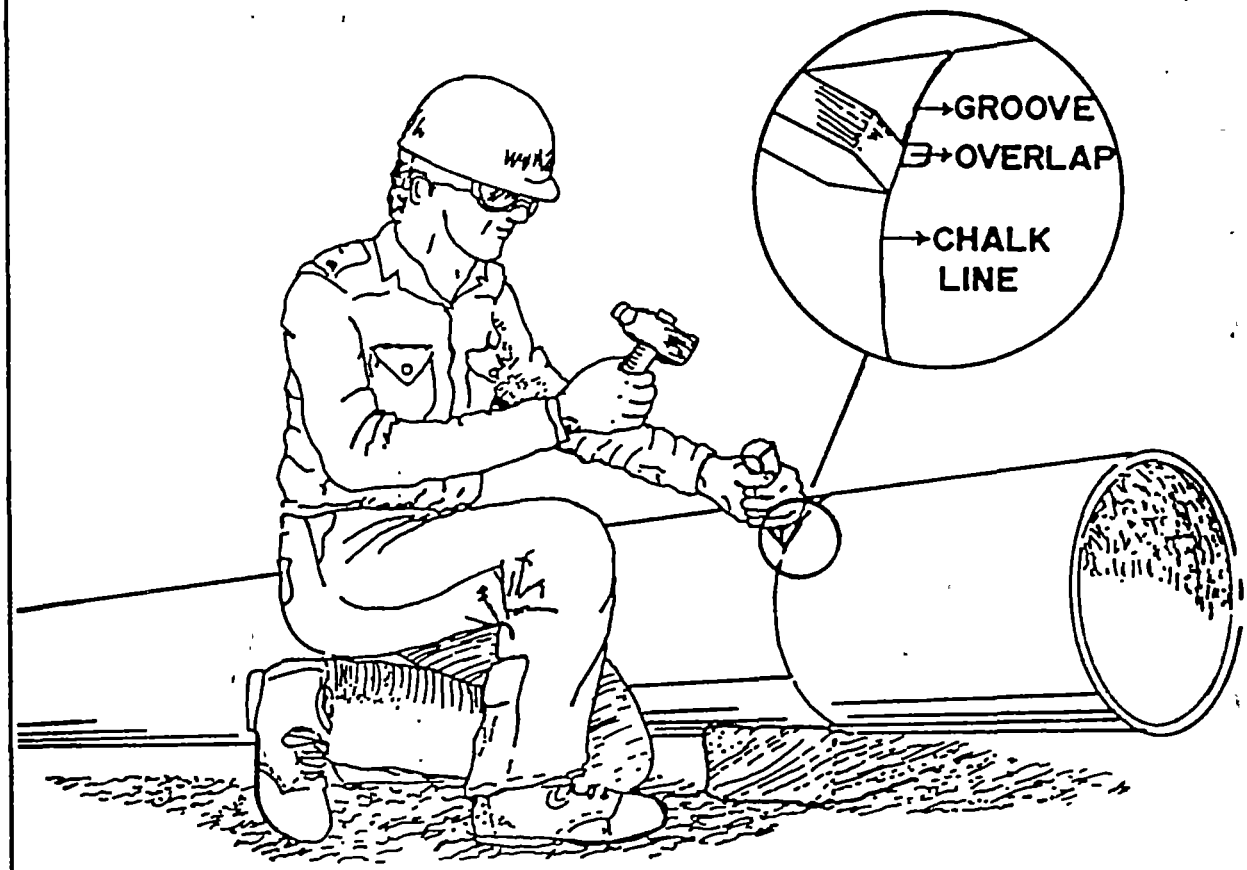

Fig. 1. Chisel and hammer method.

4. MECHANICAL CUTTER

Many mechanical cutters are presently commercially available for cutting ductile iron but the basic principles of operation are the same. It is important to measure accurately where the pipe is to be cut. Fix the mechanical cutter on the pipe. Most mechanical cutters consist of a circular frame in which adjustable high tensile steel cutting discs are set. The cutter is rotated for approximately 1/4 of the circumference of the pipe at a time, moving it forwards and backwards. The cutting edges are adjusted gradually downwards. The cutting edges, when about 30% through the wall thickness of the pipe, produce a controlled fracture rather than a full cut.

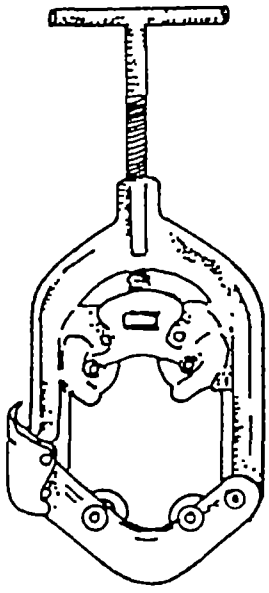

Fig. 2. Mechanical cutter for small-size ductile iron pipe.

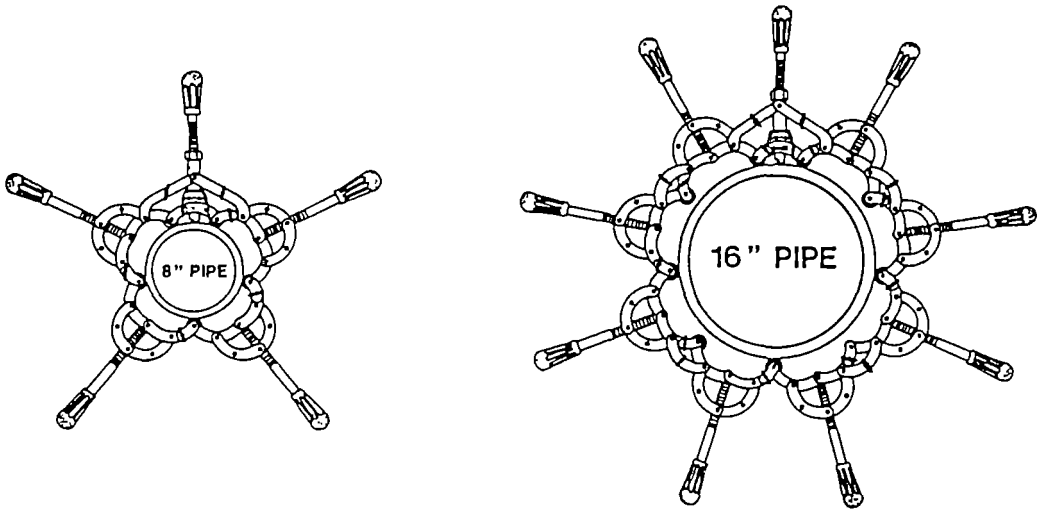

Fig. 3. Pipe cutters for large-diameter pipe.

5. HYDRAULIC PIPE CUTTER

There are several types of hydraulic cutter commercially available but principally the operation is the same in each case.
The pipe cutter is normally a heavy duty chain in which a series of high tensile steel cutting discs are set. The chain is fixed around the pipe and clamped to both sides of a hydraulic unit. When the unit is pumped, the chain is tightened around the pipe and the cutting discs are pressed into the pipe. Consequently, the higher the hydraulic pressure, the deeper the cutting discs cut into the pipe.

This again is a controlled fracture of the pipe. Still, caution must be exercised by the trainers and trainees, who should stand to the side of the hydraulic unit when cutting as the cut pipe has a tendency to jolt when the controlled fracture occurs.

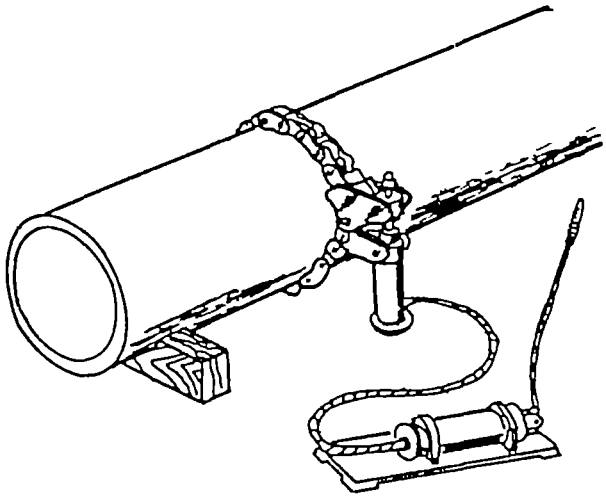

Fig. 4. Hydraulic pipe cutter.

6. SAFETY

It is important to remember that when cut, ductile iron pipe produces very sharp edges which can be dangerous. Moreover, ductile iron pipe is relatively heavy and can easily cause injuries when dropped.

7. SUMMARY

There are four basic methods of cutting ductile iron pipe, using:
a. steel saw;
b. chisel and hammer (controlled fracture);
c. mechanical cutter (controlled fracture);
d. hydraulic cutter (controlled fracture).

When using any of these methods, safety precautions should be exercised.

* * *

TITLE :	CODE :
1. Pipe cutter	TPC 156/V 1

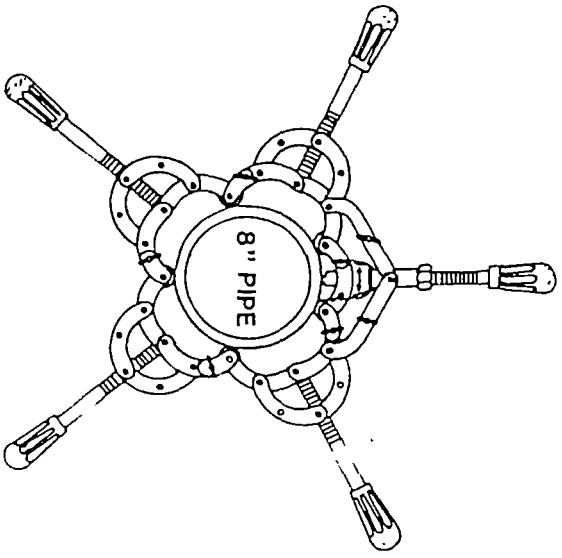
8" PIPE

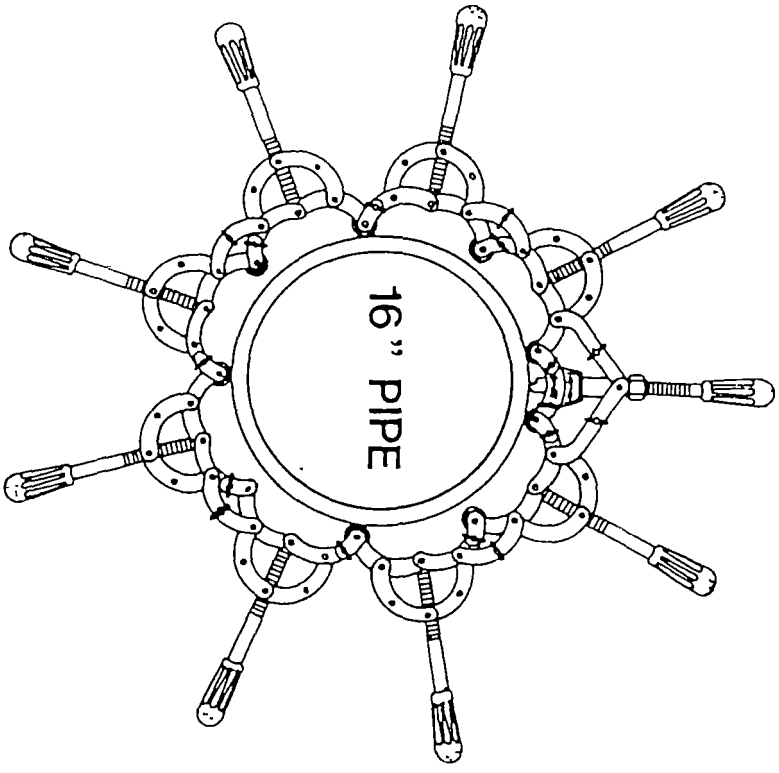
16" PIPE

Module : PIPE JOINTING INTRODUCTION	Code : TPC 160
	Edition : 17-04-1985
Section 1 : INFORMATION SHEET	Page : 01 of 01/05

Duration :	45 minutes.
Training objectives :	After the session the trainees will be able to: - list the 2 basic types of joints; - list the 4 most common types of flexible joints and indicate which of them can be used for which of the 4 basic types of pipe material; - list the 4 most common types of solid joints and indicate which of them can used for which of the 4 basic types of pipe material.
Trainee selection :	- Pipelayer; - Pipeline Inspector; - Construction Supervisor; - Head of Sub-section Distribution & Connections; - Head of Sub-section Supervision.
Training aids :	- Flexible push-on joints; - Flexible compression joints; - Solid joints - flanged; - Threaded joint; - Viewfoils : TPC 160/V 1-2; - Handout : TPC 160/H 1.
Special features :	-
Keywords :	Pipe jointing/flexible joints/solid joints.

Module : PIPE JOINTING INTRODUCTION	Code : TPC 160
	Edition : 15-03-1985
Section 2 : S E S S I O N N O T E S	Page : 01 of 01

1. Introduction	
- Good jointing is essential for good main-laying. - Each joint can be a potential source of leakage. - There are basically two types of joints for use on all types of pipe: a. flexible; b. solid.	Use whiteboard
2. Flexible joints	
- Flexible joints allow approximately 5° variation from the straight when made.	Show examples of push-on joint and compression joint
- There are essentially two types of flexible joints: a. push-on; b. compression.	Demonstrate flexibility
- Flexible joints normally rely on a rubber gasket being compressed between the socket and spigot pipe to form the joint.	
- Flexible joints can be used with the following materials	Show V 1
3. Solid joints	
- Solid joints allow no deviations from the direction of the pipe run. - When made they are solid. - Solid joints are basically of four types: a. flanged; b. welded; c. lead-run; d. threaded.	
- Solid Joints can be used with the following pipe material.	Show V 2
4. Summary	Give H 1.

Use of flexible joints TPC 160/V 1

FLEXIBLE JOINTS

	PVC	AC	CI/DI	GI
Push-on gasket	*	*	*	
Bolted gland (comp.)		*	*	
Viking Johnson (comp.)	*	*	*	*
Gibault (comp.)	*	*	*	*

Use of solid joints TPC 160/V 2

SOLID JOINTS

	PVC	AC	CI/DI	GI
Flange			*	*
Lead run		(*)	*	
Solvent weld	*			
Threaded				*

Pipe jointing introduction TPC 160/H 1

1. INTRODUCTION

The majority of leakages which occur on water mains are located at the joints. Normally this is not through deterioration of the joint or jointing materials but because of bad jointing techniques. Therefore good jointing is absolutely essential to minimise the amount of maintenance disturbances in the future.
There are basically only two types of joint which can be used in any type of pipe:
a. flexible;
b. solid.

2. FLEXIBLE JOINTS

Flexible joints have the advantage of allowing a diversion to be made from the straight line when laying pipes. This diversion will allow a variation of approximately 5° from the straight line in any direction, i.e. up and down as well as sideways.

Essentially there are only two types of flexible joints:
a. push-on;
b. compression.
Both these joints normally rely on a rubber gasket being compressed between the socket and spigot to form the joint. The rubber gasket can vary in section according to the manufacturer's design but when jointed it is compressed and deformed, making a tight water seal in the pipeline. In most circumstances when the pipe is pressurised the joint becomes stronger.
Both push-on and compression joints are made by most manufacturers and although their manufacture appears different, the basic principles of operation are identical.

Flexible joints can be used with the following materials:

Material / Joint	uPVC	AC	CAST IRON	GI
Push-on gasket	x	x	x	
Bolted gland (comp.)		x	x	
Viking Johnson (comp.)	(x)	x	x	x
Gibault (comp.)	(x)	x	x	x

3. SOLID JOINTS

Solid joints, when made, do not allow for any flexibility at the joint.

There are essentially 4 types of solid joints normally used to joint water pipes :
- flanged;
- lead-run;
- solvent weld;
- threaded.

These joints can be used according to the table below.

Material / Joint	uPVC	AC	IRON	GI
Flange			x	x
Lead Run		(x)	x	
Solvent Weld	x			
Threaded				x

4. SUMMARY

There are only two types of joint used in pipe jointing:
- flexible;
- solid.

The details of making these joints are given in other modules.

* * *

TITLE :	CODE :
1. Use of flexible joints	TPC 160/V 1
2. Use of solid joints	TPC 160/V 2

FLEXIBLE JOINTS

	PVC	AC	CI/ DI	GI
Push-on gasket	*	*	*	
Bolted gland (comp.)		*	*	
Viking Johnson (comp.)	*	*	*	*
Gibault (comp.)	*	*	*	*

SOLID JOINTS

	PVC	AC	CI / DI	GI
Flange			*	*
Lead run		(*)	*	
Solvent weld	*			
Threaded				*

Module : PIPE JOINTING, uPVC PIPE	Code : TPC 161
	Edition : 19-09-1984
Section 1 : INFORMATION SHEET	Page : 01 of 01/11

Duration :	135 minutes.
Training objectives :	After the session the trainees will be able to: - list the 3 methods of jointing uPVC pipe; - make uPVC joints using these 3 methods.
Trainee selection :	- Pipelayer; - Pipeline Inspector; - Construction Supervisor.
Training aids :	- uPVC joints: a. solvent weld; b. push-on; c. compression; - Lubricant; - Solvent cement; - Cleaning fluid; - Brush; - Blocks; - Levers; - Viewfoils : TPC 161/V 1-3; - Handout : TPC 161/H 1.
Special features :	-
Keywords :	Pipe jointing/uPVC pipe/uPVC pipe joints.

1. Introduction	
- There are basically three types of joint used on uPVC pipe: a. push-on (flexible); b. solvent weld (solid); c. compression (flexible).	Use whiteboard
2. Push-on (flexible) joint	
- Push-on joints are flexible, allowing a 5° deflection at the joint.	Show and explain joint Show V 1 (a-b)
- Good preparation of the joint is essential.	Show and explain procedures
- The procedure to apply a push-on flexible joint: . cut pipe to correct length; . clean the inside of the socket thoroughly; . insert gasket in the recess of the socket; . lubricate the exposed area of the gasket with manufacturer's lubricant; . chamfer the spigot end of the pipe with file; . mark depth of the socket on the spigot end of pipe; . insert spigot into socket as far as the front of the gasket; . align spigot and socket; . push home the spigot into the spigot into the socket as far as the mark previously made, using either: a. lever; b. chain puller; . clean surplus lubricant from the joint.	Show V 2 (a-b) Let trainees practice
3. Solvent weld (solid) joint	
- Solvent weld joints, once are solid.	Show V 3 Show and explain joint
- Good preparation of the joint is essential.	Show and explain pro-procedure

- The correct procedure to make a solvent weld (solid) joint: . cut the pipe to the correct length; . clean inside of socket using manufacturer's cleaning fluid; . abrade <u>inside</u> of socket with sand paper - abrasions to be made around the circumference at 90° to the axis of the pipe; . abrade the <u>outside</u> of spigot with sand paper - abrasions to be made around the circumference at 90° to the axis of the pipe; . mark depth of socket on spigot pipe; . apply solvent cement to: a. inside of socket; b. outside of spiogt;	
CAUTION - DO NOT INHALE FUMES OF CLEANING FLUID OR SOLVENT CEMENT!	Explain
. push spigot into socket up to the mark;	Demonstrate
NOTE: The joint can be made up to approximately 2 minutes after the first application of the cement - after this time the cement begins to set.	Explain
. wipe off any surplus cement; . allow joint to stand for at least 20 minutes in order that the cement can set properly.	Let trainees practice
4. **Compression type joints**	
- There are several types of compression joint available commercially, e.g. a. Gibault; b. Viking Johnson etc. They all work on the same principle of compressing a rubber gasket at each end of a sleeve by means of tie bolts. Spigot pipe is indicated at each end of the sleeve.	Show joints and explain functioning

- The correct procedure to apply compression type joints: . cut the pipe to the correct length; . mark depth of socket on spigot end of pipe; . slide joint sleeve over end of pipe and align to markings on spigot; . tighten bolts on sleeve in sequence; . tighten to correct torque as per manufacturer's instructions.	Show and explain procedure Let trainees practice
5. **Safety** - Safety should be noted when cutting and jointing uPVC pipes. - Highly dangerous toxic gases are released by solvent cement and cleaning fluid.	
6. **Summary**	Give H 1

Module : PIPE JOINTING, uPVC PIPE	Code : TPC 161
	Edition : 19-09-1984
Section 3 : T R A I N I N G A I D S	Page : 01 of 01

Push-on (flexible) joint TPC 161/V 1

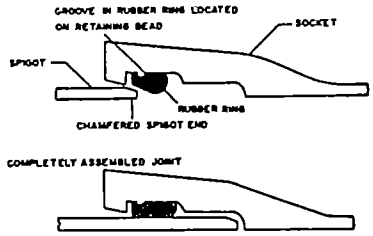

Lever and chain puller methods TPC 161/V 2

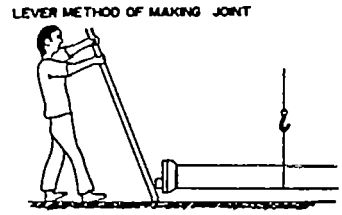

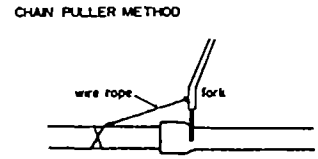

PVC pipe fittings TPC 161/V 3

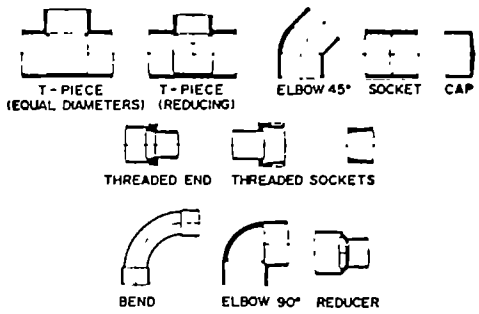

PVC PIPE FITTINGS

Pipe jointing, uPVC pipe TPC 161/H 1

1. INTRODUCTION

There are essentially three types of joint which may be used on uPVC pipes :
a. push-on (flexible);
b. solvent weld (solid);.
c. compression (flexible).
The use of each type of joint is determined by the site conditions, availability, cost etc. Push-on and solid weld joints are cheaper than compression joints.

2. PUSH-ON (FLEXIBLE) JOINTS

As with all push-on (flexible) joints, these allow a 5° deviation at the joint, and in the case of uPVC pipe, because of the nature of the material, good preparation of the joint is essential.
The spigot pipe must be cut to the correct length and the inside of the socket must be cleaned thoroughly to remove any traces of dirt, grit, stones etc. This is very important, as a rubber gasket must fit into the recess which is formed into the socket during manufacture. Having fitted the gasket, the exposed area of the gasket should be lubricated, using the lubricant recommended by the manufacturer. Most lubricants are chemically similar to a soft detergent soap.

In order to introduce the spigot into the socket the end of the spigot must be chamfered at approximately 45° and lubricated before insertion into the socket. Normally the chamfering is done on site using a file but when full pipe lengths are supplied the manufacturer mechanically makes these chamfers at the factory.

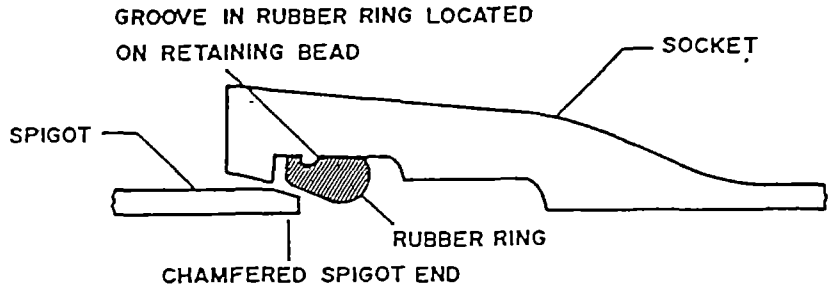

Fig. 1. Push-on joint; (A) Initial entry of spigot into socket.

COMPLETELY ASSEMBLED JOINT

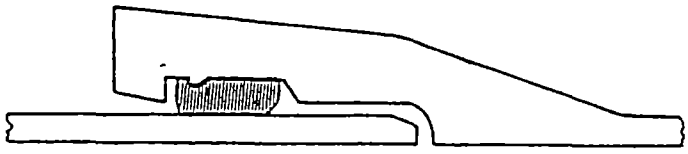

Fig. 1. (B) Completely assembled unit.

uPVC pipe is springey by nature and very often when making a joint it appears to be fully home when it is not. Therefore, it is essential to mark on the spigot end of the pipe the depth of the socket, so that when it is pushed home the jointer can see instantly that the joint is properly made. As with all push-on joints the socket and spigot should be aligned prior to jointing and the spigot pushed into the socket firmly up to the mark. This can be done by means of :

a. a lever;
b. a chain puller.

LEVER METHOD OF MAKING JOINT

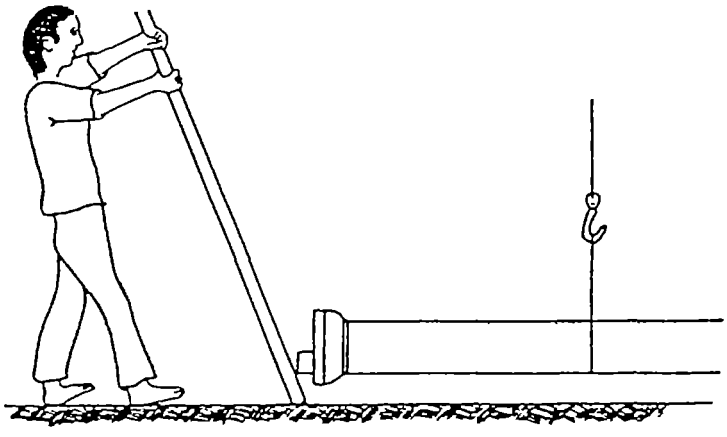

Fig. 2. Lever method of making joint.

CHAIN PULLER METHOD

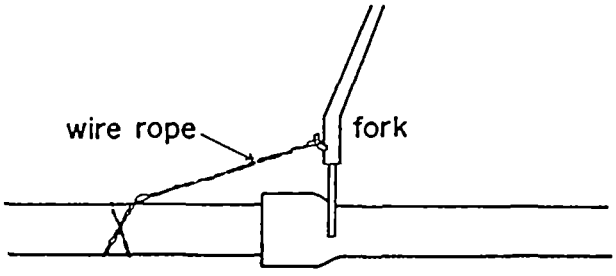

Fig. 3. Chain puller method.

After completion of the joint, all surplus lubricant should be cleaned away.

3. SOLVENT WELD (SOLID) JOINTS

All solvent weld joints are solid and cannot be broken.
A solvent cement is introduced between the socket and the spigot and the chemical reaction of the cement on the uPVC forms what is principally a chemical weld due to the chemical reaction taking place within the joint. This reaction takes approximately 20 minutes to complete, but most of the welding has to be done within the first two (2) minutes.

As with all pipe joints the preparation prior to jointing is as important as the joint itself. The pipe should be cut to the correct length.

Both the socket and the spigot should be wiped clean of any surplus dirt and then abraded with sand paper to aid the chemical reaction. These abrasions should follow the circumference of the pipe to eliminate the possibility of leakage if the cement is applied incorrectly. The socket and spigot must then be cleaned, using the manufacturer's special cleaning fluid, and the depth of the socket marked on the spigot pipe. The cleaning fluid will evaporate in approximately thirty (30) seconds, leaving the joint perfectly clean and ready for application of the solvent cement. This must be applied with a small paint brush approximately 2.5 cm in width, around the internal surface of the spigot.

The chemical reaction occurs immediately the cement and uPVC come in contact. Therefore, the joint should be made within two (2) minutes of the application of the cement.

Position the spigot into the socket as far as the mark and immediately wipe off any surplus cement as this can damage the pipe.

CAUTION - DO NOT INHALE THE FUMES OF THE CLEANING FLUID OR SOLVENT CEMENT, THEY ARE DANGEROUS!

The joint must now stand for at least twenty (20) minutes, to allow the cement to set thoroughly.

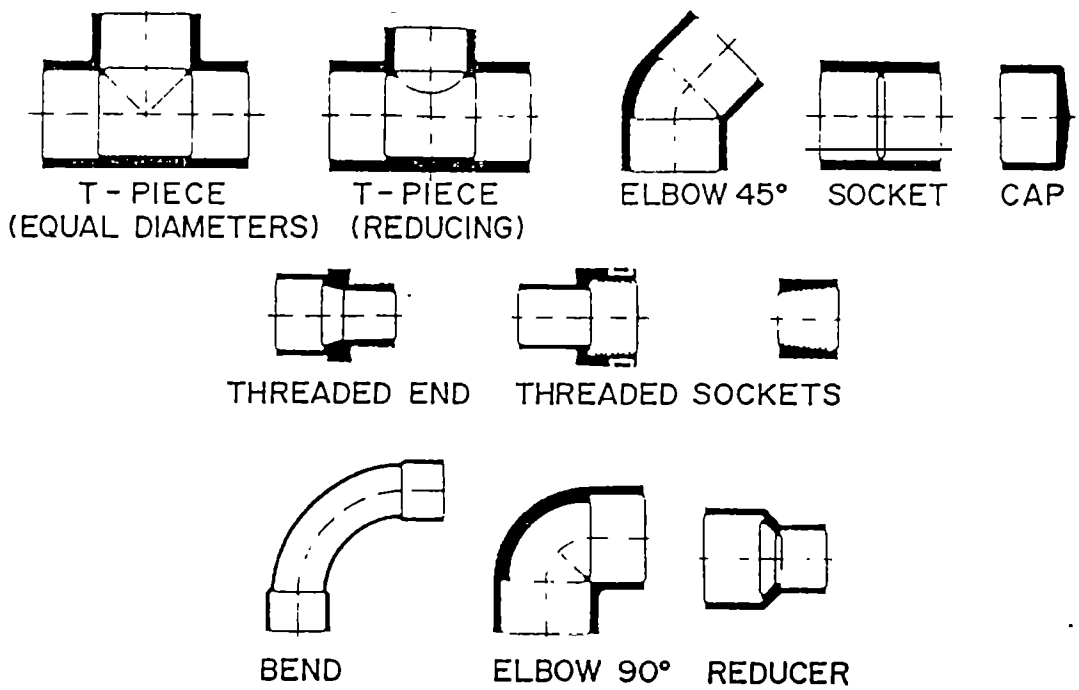

Fig. 4. PVC pipe fittings.

4. COMPRESSION JOINTS

The use of compression joints on uPVC pipe is expensive compared to the other two methods. However, in certain circumstances they may have to be used.

There are several types of compression joints commercially available e.g.
a. Gibault;
b. Viking Johnson etc.

They all work on the same basic principle of compressing a rubber gasket at each end of the sleeve socket (between the sleeve and the spigot pipe) by means of bolts.
The pipe must be cut to the correct length and the depth of the socket marked on the spigot. Then the joint sleeve must be slid over the end of the pipe and aligned to the mark on the spigot.

The bolts must be tightened in sequence to a torque as specified by the manufacturer.

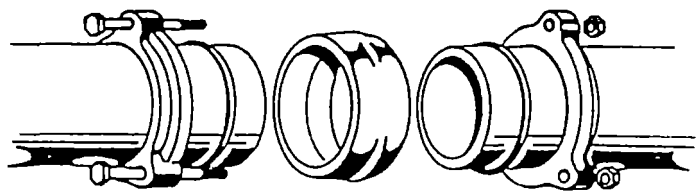

Fig. 5. Gibault joint

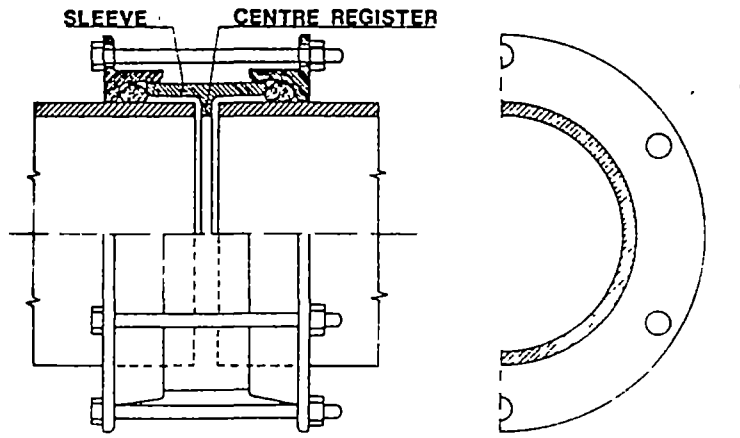

Fig. 6. Viking Johnson coupling.

5. SAFETY

There are several additional safety points which should be noted when using uPVC pipes, particularly when solvent welding. The gases released by the cleaning fluid and the solvent cement are highly dangerous when inhaled.
Although uPVC pipe is light in weight, caution should still be exercised when carrying and handling this type of pipe.

6. SUMMARY

The three types of joint available for jointing uPVC pipe are :
a. push-on (flexible);
b. solvent weld (solid);
c. compression (flexible).

All safety points should be noted when handling these types of joint.

* * *

TITLE :	CODE :
1. Push-on (flexible) joint	TPC 161/V 1
2. Lever and chain puller methods	TPC 161/V 2
3. PVC pipe fittings	TPC 161/V 3

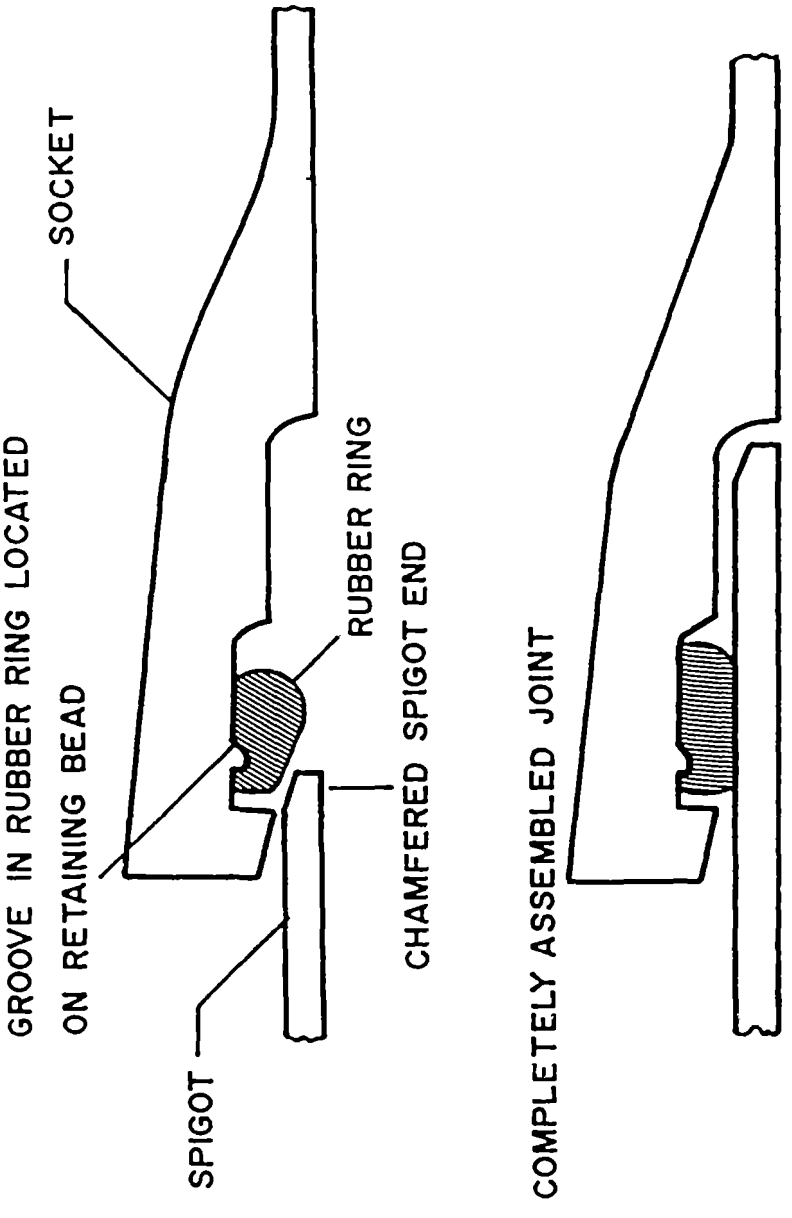
SOCKET
GROOVE IN RUBBER RING LOCATED
ON RETAINING BEAD
RUBBER RING
CHAMFERED SPIGOT END
SPIGOT
COMPLETELY ASSEMBLED JOINT

LEVER METHOD OF MAKING JOINT

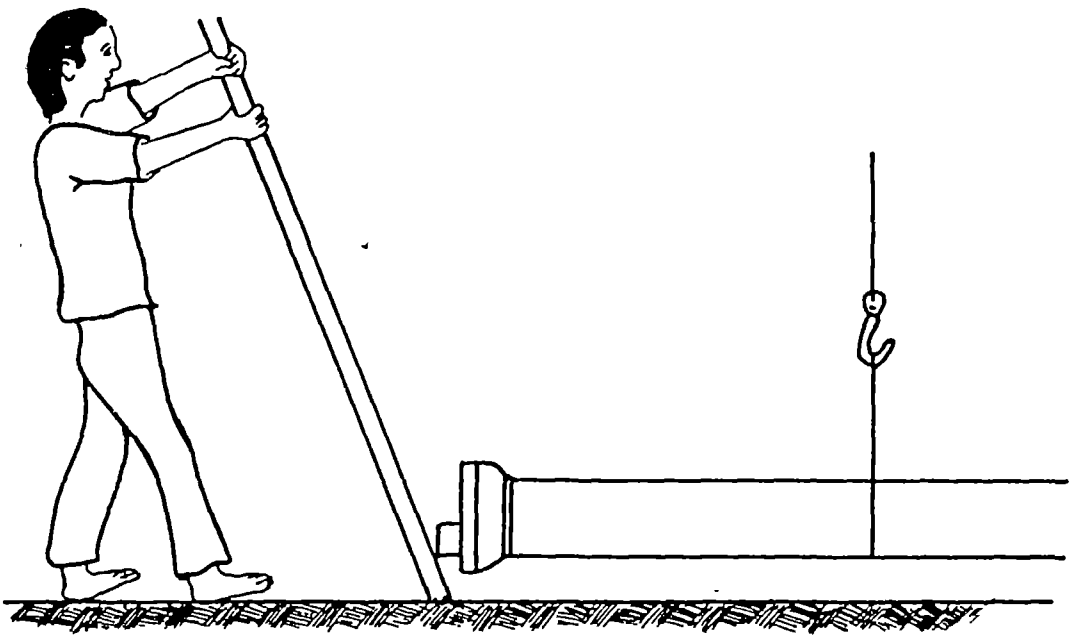

CHAIN PULLER METHOD

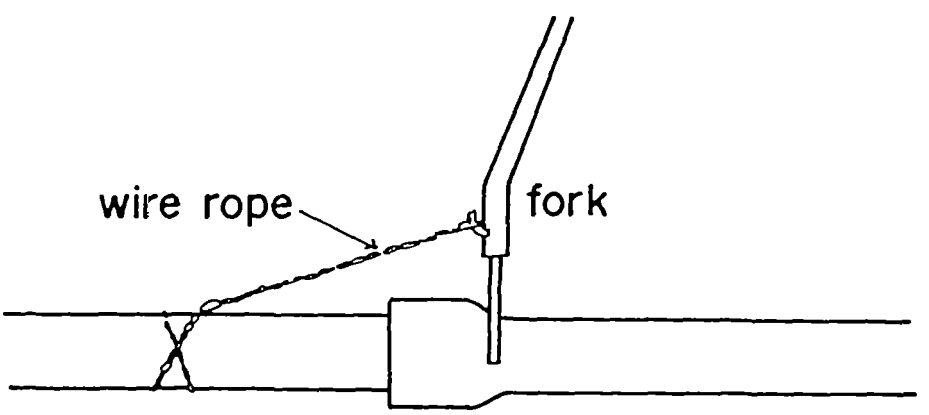

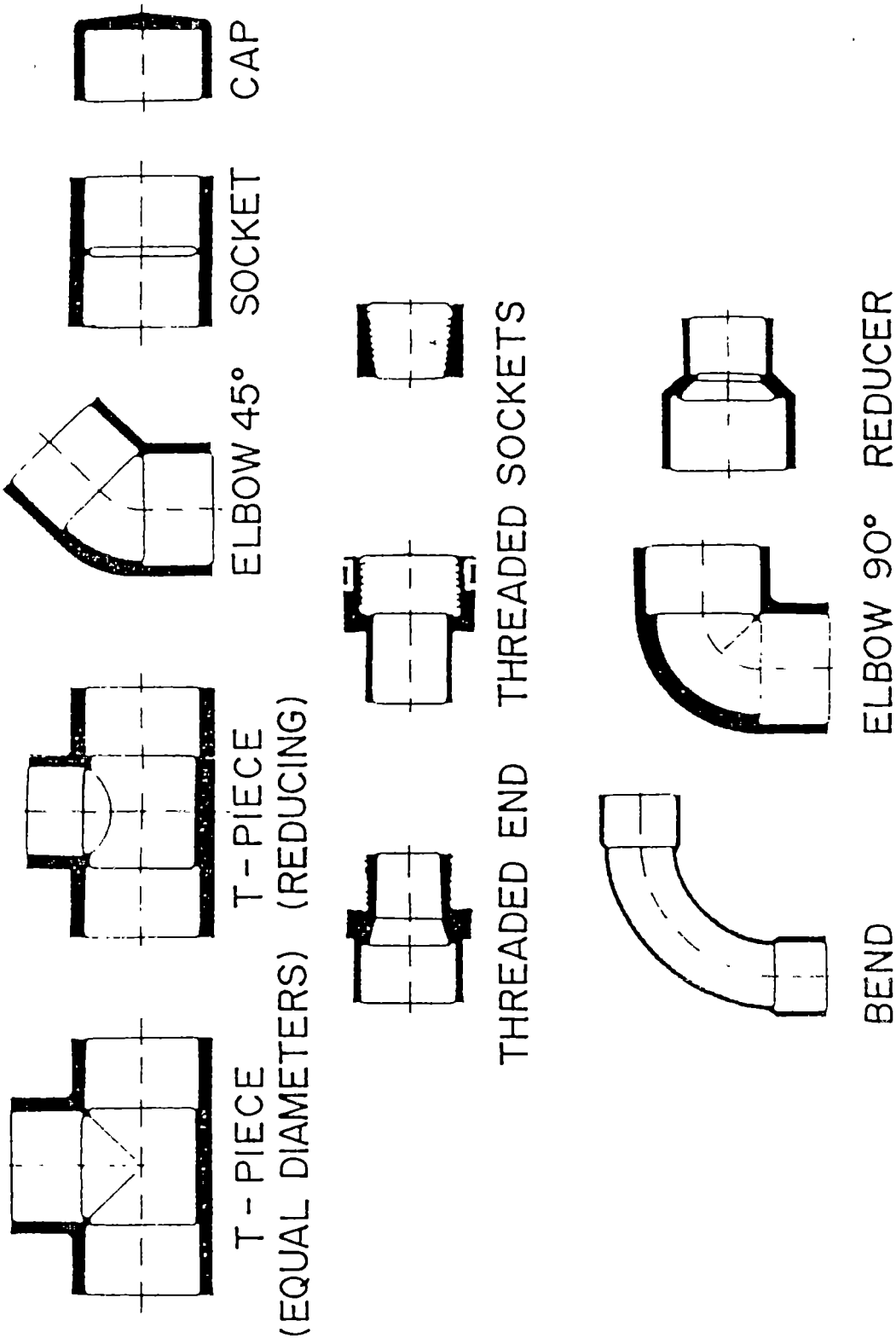

PVC PIPE FITTINGS

Module : PIPE JOINTING, ASBESTOS-CEMENT PIPES	Code : TPC 162
	Edition : 20-09-1984
Section 1 : INFORMATION SHEET	Page : 01 of 01/10

Duration :	135 minutes.
Training objectives :	After the session the trainees will be able to: - list the two methods of making AC pipe joints; - use both methods.
Trainee selection :	- Pipelayer; - Pipeline Inspector; - Construction Supervisor.
Training aids :	- AC pipe lathe; - Short lengths of AC pipe; - Push-on AC joint; - Compression joint; - Lubricant; - Levers; - Chain puller; - Blocks; - Viewfoils : TPC 162/V 1; - Handout : TPC 162/H 1.
Special features :	-
Keywords :	Pipe jointing/AC pipe/AC pipe joints.

1. Introduction	
- There are basically two types of joint used on AC pipe: a. push-on; b. compression.	Use whiteboard
2. Push-on joints	
- As it is extremely difficult to form a socket on AC pipe during the manufacturing process, AC push-on joints are essentially collars with sockets at both ends.	Show push-on joint
- Push-on joints are flexible, allowing a 5° deflection at each joint.	Show on sample
- Good preparation of the joint is essential.	Demonstrate and explain method
- The pipe has to be cut to the correct length.	
- The manufacturer normally turns down the ends to an outside diameter consistent with (grey) cast iron, consequently when an AC pipe is cut, the ends must be turned down to the correct diameter prior to jointing.	Show V 1
- The next steps of the correct procedure are: . mark the depth of the socket on the spigot end of the pipe with chalk; . insert the rubber gaskets into the recesses at both ends of the socket; . lubricate the exposed part of the gasket with manufacturer's lubricant; . lubricate the spigot end of the pipe; . insert spigot into socket as far as the gasket; . align socket and spigot.	
NOTE : It is critical on all push-on AC joints to align the spigot and socket perfectly.	Explain

- The remaining steps of the procedure are: . push home spigot into socket as far as the mark on spigot, using: a. lever, or b. chain puller;	
. make the push-on joint at the other end of the socket in the same manner but caution must be excercised with the socket as it tends to slide along the pipe.	Demonstrate appropriate method
The socket must be held in position during the jointing sequence.	Let trainees practice
3. **Compression joint**	
- Good preparation of the joint is essential.	Demonstrate and explain method
- The correct procedure is: . cut pipe to correct length; . turn down end of AC pipe using AC pipe turner; . mark depth of socket on spigot; . insert spigot into socket as far as the mark . turn down end of 2nd AC pipe; . mark depth of socket on spigot; . insert spigot into socket; . tighten bolts on compression joint in sequence; . tighten to torque as recommended by manufacturer.	Let trainees practice
4. **Safety**	
- Do not inhale asbestos cement dust. - Caution is necessary when handling pipe as it is heavy.	Explain key points of safety
5. **Summary**	Give H 1

Field lathe for AC pipes — TPC 162/V 1

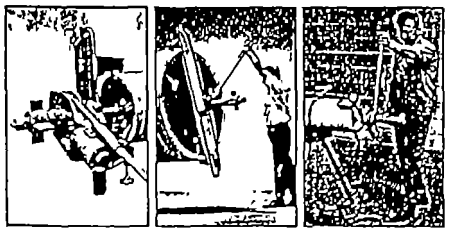

FIELD LATHES FOR AC PIPES

Pipe jointing, asbestos-cement pipes — TPC 162/H 1

1. INTRODUCTION

Two types of joints are normally used on AC pipes:
a. push-on joints;
b. compression joints.
Whilst there are many variations on these joints by individual manufacturers, the essential mode of operation is the same for all.

2. PUSH-ON JOINTS

It is extremely difficult to form a socket on AC pipe during the manufacturing process so that the cost of making such a joint would be prohibitive. Therefore, separate AC push-on joints are used, which are basically collars with socket joints at both ends.
These joints are flexible, allowing a 5° deviation at each joint. Good preparation of the joint is essential and the pipe should be cut correctly.

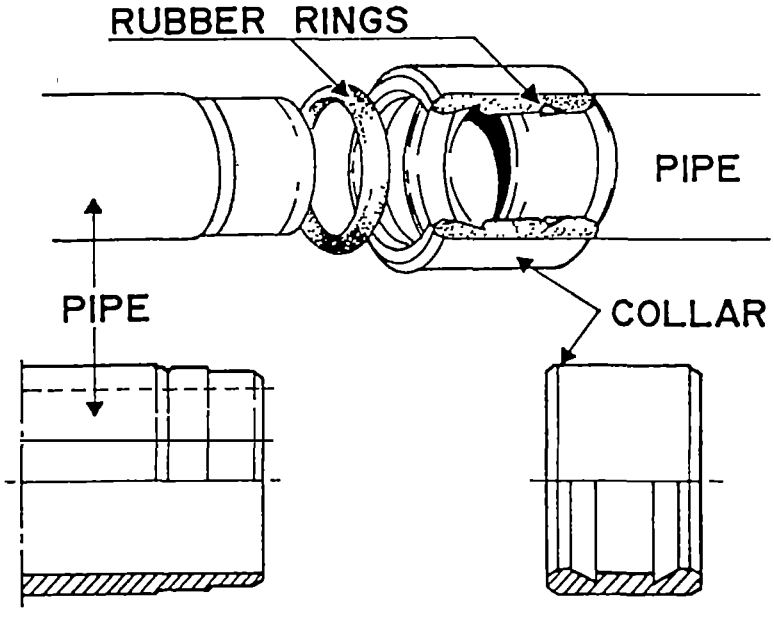

Fig. 1. Push-on joint.

AC pipe has a standard internal diameter, but the outside diameter varies along the length of the pipe. The manufacturer normally turns down the ends of each piece of pipe to an outside diameter consistent with cast iron pipe. Consequently, when the pipe is cut, the end must be turned down to the correct diameter to make it ready for jointing.
This turning down is done with a commercially available AC pipe turner. This is essentially a rotating lathe which clamps on the pipe, allowing the spigot end to be turned down to the correct diameter.

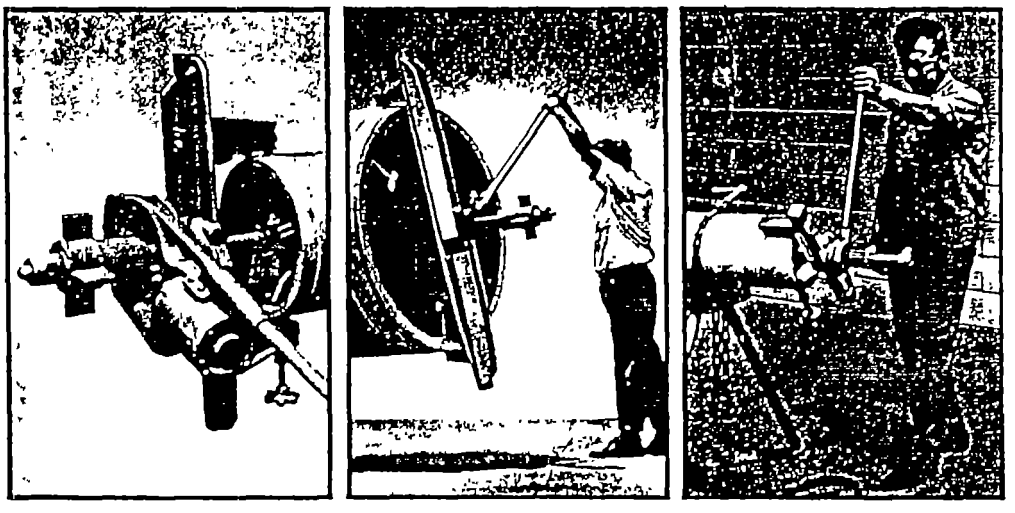

Fig. 2. Field lathes for AC pipes.

The depth of the socket should be marked on the spigot before, but also after the turning process. The reason for this is that the original mark is obliterated by the turning process itself, as this is continued for approximately 4 cm beyond the original marking.

Insert the rubber gaskets into the recesses at both ends of the socket, lubricating the exposed parts of the gasket with the manufacturer's lubricant. Additionally the spigot ends of the pipe should be lubricated.
Insert the spigot into the socket as far as the gasket and align the socket with the spigot.

Note : <u>IT IS CRITICAL ON ALL PUSH-ON AC JOINTS TO ALIGN THE SPIGOT AND SOCKET PERFECTLY</u>

- Push home spigot into socket as far as the mark on spigot using:
  a. lever (see Fig. 3.), or
  b. chain puller (see Fig. 4.).

- Make the push-on joint at the other end of the socket in the same manner but ensure that the socket does not slide along the pipe. The socket must be held in position during the jointing sequence.

3. COMPRESSION JOINT - AC PIPE

Good preparation of the joint is again essential and the pipe should be cut to the correct length and turned down using the AC pipe turner. The compression type of joint normally comprises a middle sleeve with a gasket at each end, thus forming a double joint.
The gasket is compressed by means of a collar and tie bolts. Mark the depth of the socket on each end of the AC pipe and slide the sleeve over the pipe. Tighten the bolts in sequence, applying a torque as recommended by the manufacturer.

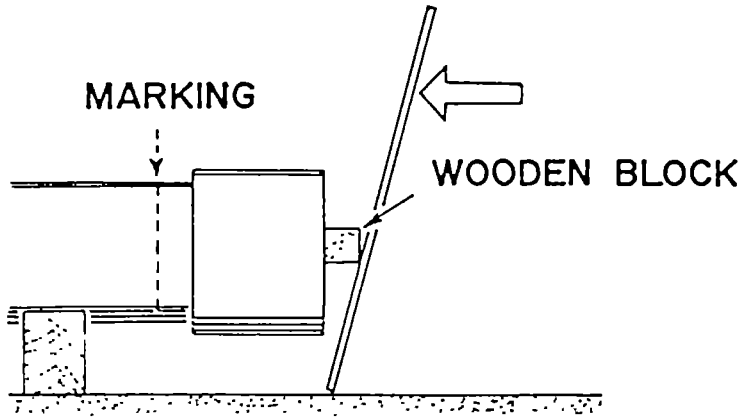

FITTING THE SOCKET (OVER Ø 200)

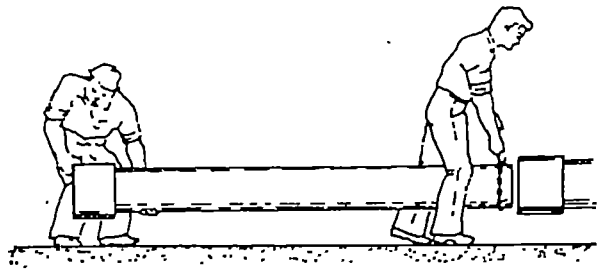

INSTALLING THE PIPE (UP TO Ø 200)

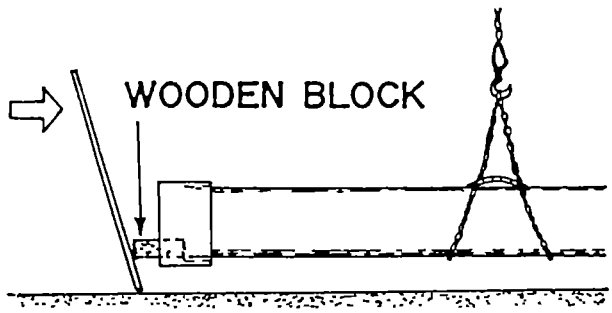

INSTALLING THE PIPE (OVER Ø 200)

Fig. 3. Pipe assembly using lever.

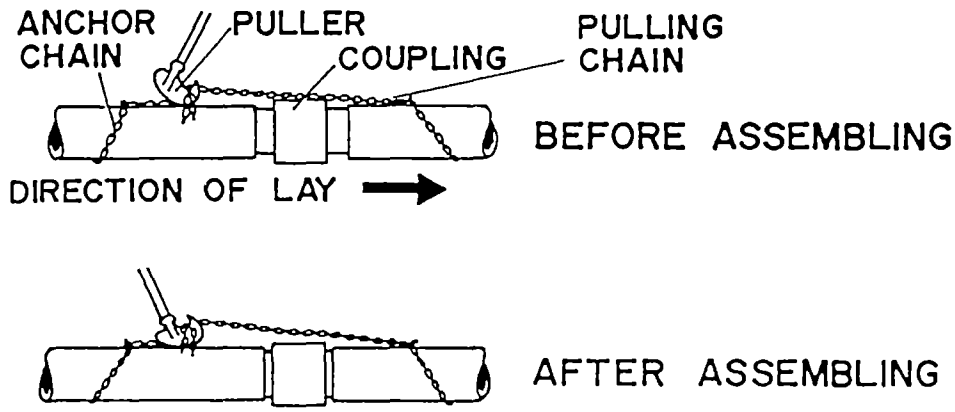

Fig. 4. Pipe assembly using chain puller.

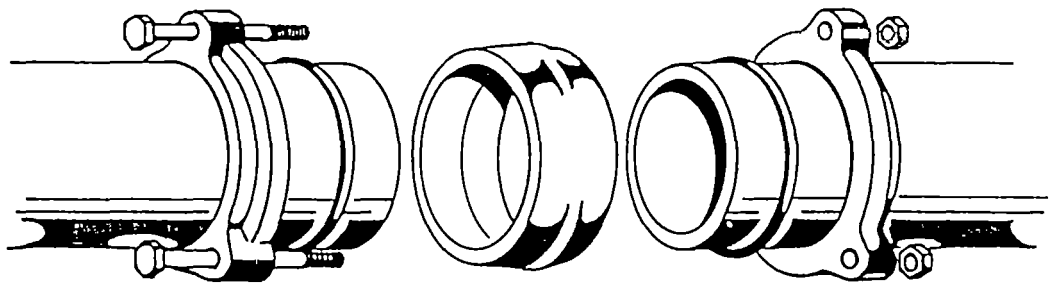

Fig. 5. Gibault joint.

4. SAFETY

It is dangerous to inhale asbestos cement dust, so extreme caution must be exercised when cutting or turning AC pipe. The pipe is heavy and care must be taken when handling and carrying this type of pipe. The pipe is also easily damaged when dropped.

5. SUMMARY

There are basically two types of joints for use on AC pipes :
- push-on;
- compression.

Safety points should be noted when handling AC pipe.

* * *

TITLE :	CODE :
1. Field lathes for AC pipes	TPC 162/V 1

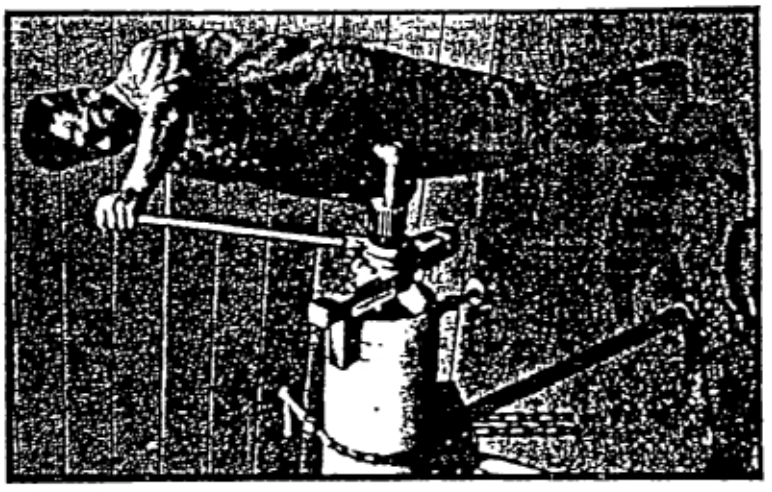

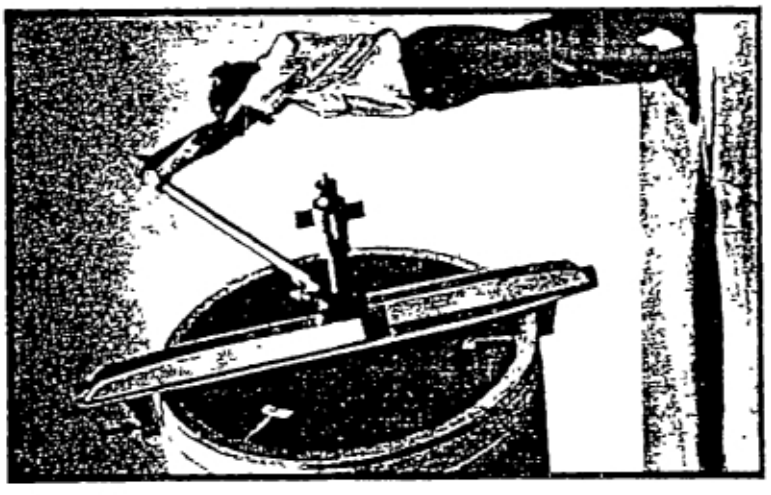

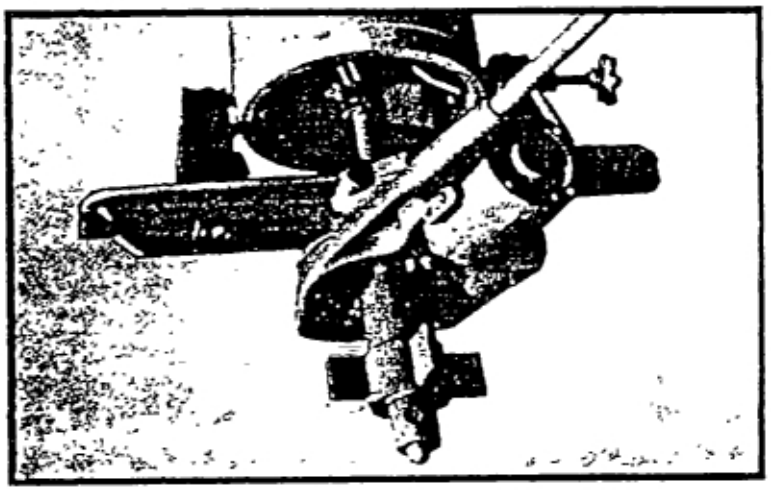

FIELD LATHES FOR A.C. PIPES

Module : PIPE JOINTING, G.I. PIPE	Code : TPC 163
	Edition : 15-03-1985
Section 1 : INFORMATION SHEET	Page : 01 of 01/10

Duration :	135 minutes.
Training objectives :	After the session the trainees will be able to: - list the two methods of jointing G.I. pipes; - use both methods.
Trainee selection :	- Pipelayer; - Pipeline Inspector; - Construction Supervisor.
Training aids :	- Threaded joints; - Compression joints; - Dicing machine; - Spanners; - Thread tape (PTFE); - Viewfoils : TPC 163/V1-3; - Handout : TPC 163/H 1.
Special features :	-
Keywords :	Pipe jointing/G.I. pipe/G.I. pipe joints.

1. Introduction	
- There are essentially two ways of jointing G.I. pipe: a. threaded joint method; b. compression joint method; and both are used extensively to joint G.I. pipe.	Use whiteboard
2. Threaded joint method	
- The correct procedure is: . measure and cut pipes to correct length; . fix pipe in vice; . select dicing machine cutting teeth and fix in dicing machine; . fix machine to end of pipe; . lubricate the pipe end; . continue to cut until required amount of thread is available on pipe; . remove dicing machine from pipe; . clean treads of any "burrs" etc;	Demonstrate and explain method
<u>Note</u> The thread cut should be tapered when complete.	Show tapered thread
. apply sealing tape to pipe threads (PTFE tape); . the screwed joint or socket can now be screwed on to the pipe and tightened with a spanner; . another piece of pipe can now be threaded in the same way and screwed into the socket and tightened with a spanner.	Let trainees practice
3. Compression joints	
- There are many types of compression joints commercially available e.g. . bolted gland; . Gibault; . Viking Johnson etc. - Each operates on the same basic principle of compressing a rubber gasket by means of tie bolts.	Show samples

- Some are single joints with a socket formed on the end of the pipe e.g. bolted gland, gland, whilst others are double joints with a sleeve to joint two spigot ends together e.g. Gibault, Viking Johnson.	Show V 2/V 3 in case relevant type of coupling is not available
- Good preparation of the joint is essential.	Explain and demonstrate method
- The correct procedure is: . cut the pipe to the correct length; . mark depth of the socket on the spigot end of the pipe; . push collar and gasket over spigot end of the pipe; . insert spigot end of pipe into socket up to the mark; . align socket and spigot pipes; . push collar and gasket as far as possible towards the socket; . insert tie-bolts; . tighten tie-bolts in sequence and in accordance with the manufacturer's recommendations regarding torque.	Let trainees practice
4. Summary	Give H 1

Module : PIPE JOINTING, G.I. PIPE	Code : TPC 163
	Edition : 15-03-1985
Section 3 : T R A I N I N G A I D S	Page : 01 of 01

GI pipe fittings TPC 163/V 1

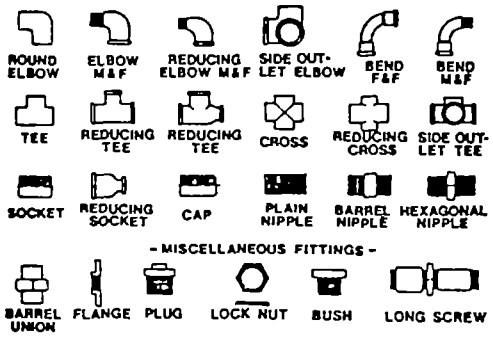

PIPE FITTINGS FOR USE WITH G.I. PIPE

Viking Johnson coupling TPC 163/V 2

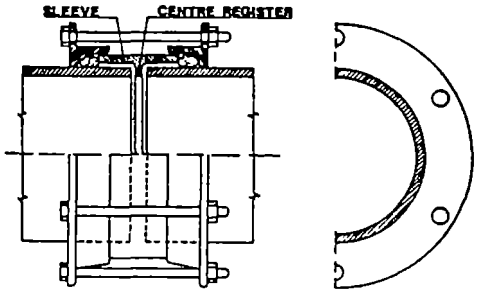

VIKING-JOHNSON COUPLING

Gibault joint TPC 163/V 3

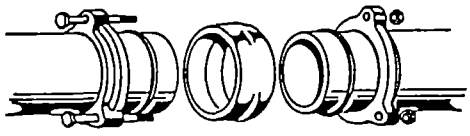

GIBAULT JOINT

Pipe jointing, GI pipe TPC 163/H 1

1. INTRODUCTION

Jointing galvanised iron pipe is relatively simple and there are only two basic types of joints:
a. threaded joints;
b. compression joints.

2. THREADED JOINT METHOD

This type of joint involves cutting a thread on the end of the pipe which can then be screwed into a socket.
A dicing machine is used to make these threads.

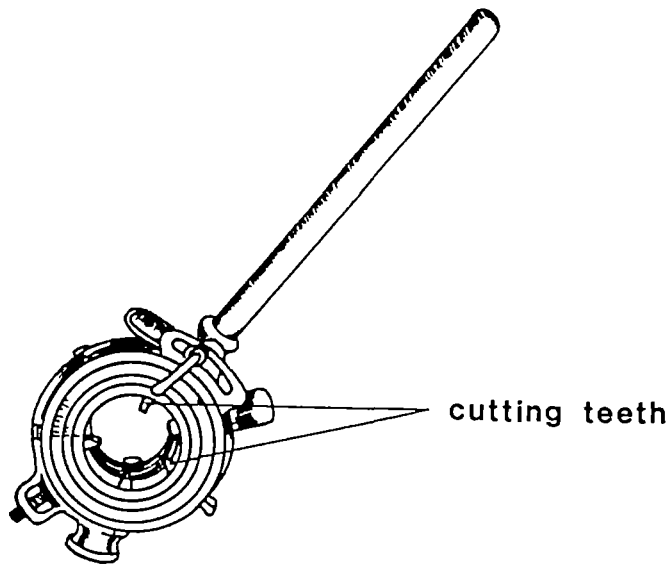

DICING MACHINE

Fig. 1. Dicing machine.

It is operated in the following way

1. Choose the correct cutting teeth to suit the pipe diameter.
2. For the first "pass", set the cutting teeth a little wider than the final setting.
3. Put some oil on the pipe end.
4. Fix the dicing machine over the pipe, ensuring that it is perpendicular to the pipe.
5. Apply pressure to the die for the first 3 threads, adding more oil when necessary.
6. Operate the handle clock-wise in a push-arc.
7. Do not force the dicing machine, but continue cutting until the required length of thread has been made.
8. Remove the dicing machine by rotating anti-clockwise. Do not force it as this may break the threads or the cutting teeth. Support with hand as it nears the end of the pipe.
9. Set the cutting teeth to their final position and repeat steps 5 to 8.

NOTE : For pipes larger than 50 mm diameter, 3 passes of the dicing machine will be necessary. Also, an assistant will be needed to help support the weight of the heavier equipment.

Allowances for threading for pipes of various diameters are given below :

PIPE DIAMETER	LENGTH OF THREAD
50 mm	24 mm
75 mm	30 mm
100 mm	30 mm

The threads which have been cut in accordance with the above will have a slight taper :

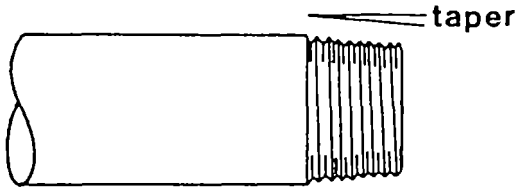

Fig. 2. Taper at threaded end.

To prepare the threads for jointing it is wise to roughen the metal between the threads using an old saw-blade, so that the sealing material will grip more readily :

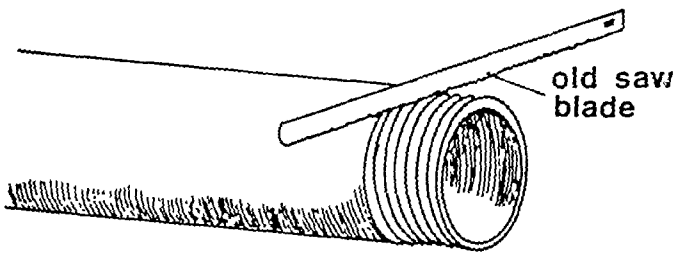

Fig. 3. Roughening threaded end.

Next, roll on PTFE tape over the threads, in a clockwise direction.

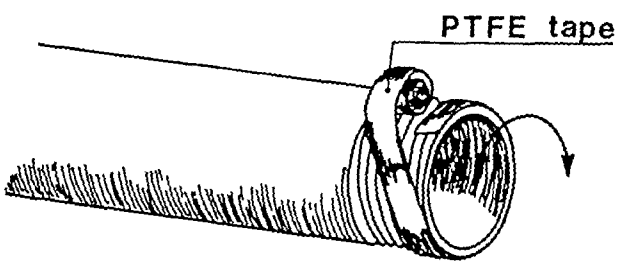

Fig. 4. Applying PTFE tape.

The screwed socket can now be attached, but care must be taken to ensure proper alignment, to avoid cross-threading. Tighten by hand initially, then tighten gradually with a wrench until the fitting has travelled the full length of the thread.

NOTE : Pipes usually arrive from the manufacturer with threads already cut at each end. These are often damaged in transit. It is sometimes standard procedure to cut-off half the length of thread at each end of the pipes, and to recut the threads on site. This helps to ensure a watertight joint.

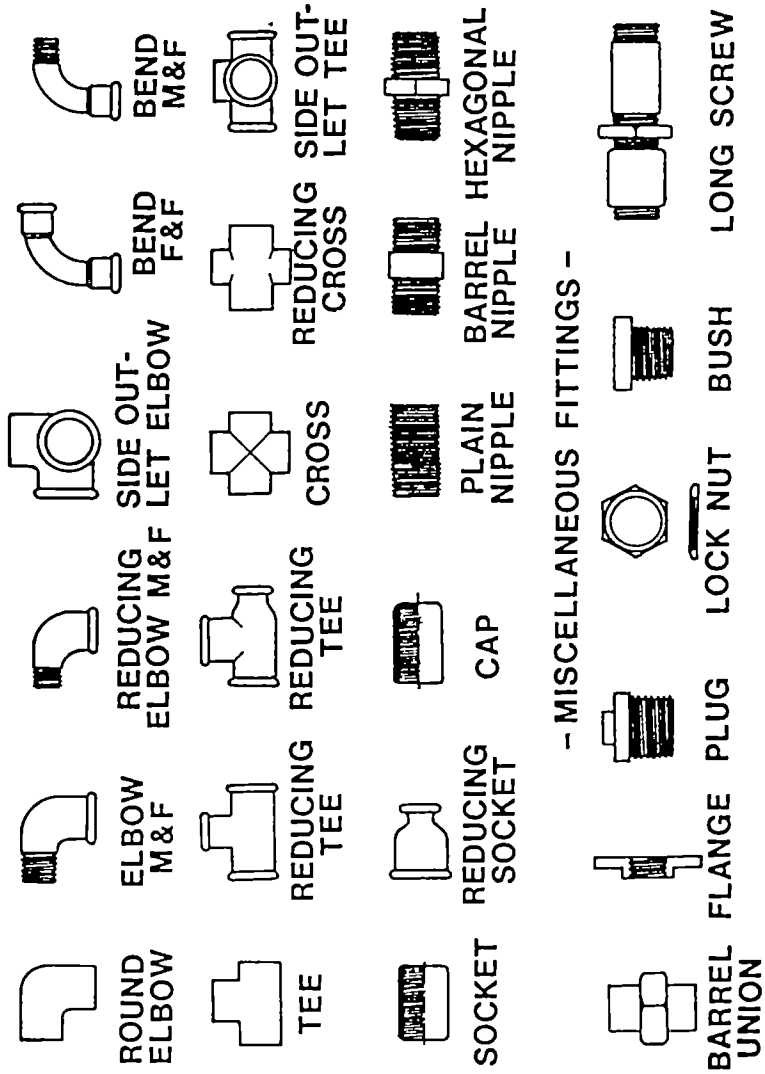

Fig. 5. Pipe fittings for use with GI pipe.

3. COMPRESSION JOINTS

There are many varieties of compression joints available commercially
a. bolted gland;
b. Gibault;
c. Viking Johnson etc.

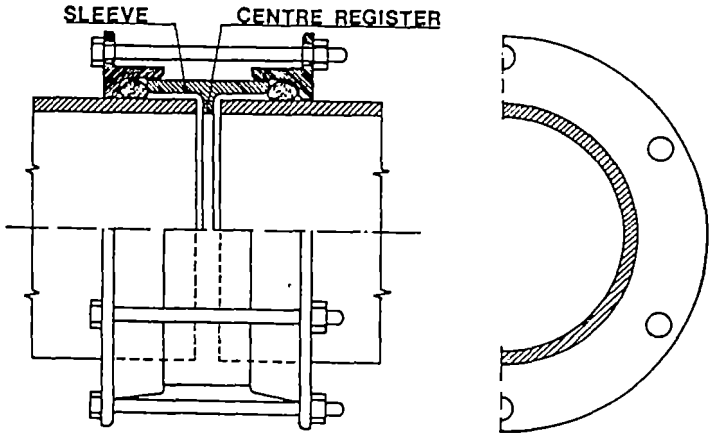

Fig. 6. Viking Johnson coupling.

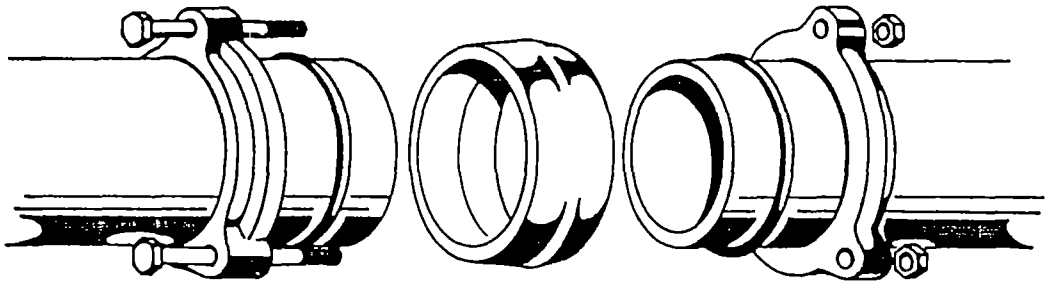

Fig. 7. Gibault joint.

Each of these joints operates on the same basic principle of compressing a rubber gasket by means of tie bolts. Some are single joints with a socket formed on the end of the pipe, e.g. bolted gland, whilst other are double joints with a sleeve to join two spigot ends together, e.g. Gibault, Viking Johnson.
The joint should be prepared correctly and the pipe cut to the correct length.
Having marked the depth of the socket on the spigot, insert the end of the spigot into the socket up to the mark and align the socket and spigot.
After pushing the collar and gasket as far as possible towards the socket, insert the tie bolts and tighten in sequence, in accordance with the torque as recommended by the manufacturers.

4. SUMMARY

There are essentially only two methods of jointing galvanised iron pipe:
a. threaded joint method;
b. compression joint method.

* * *

TITLE :	CODE :
1. GI pipe fittings	TPC 163/V 1
2. Viking-Johnson coupling	TPC 163/V 2
3. Gibault joint	TPC 163/V 3

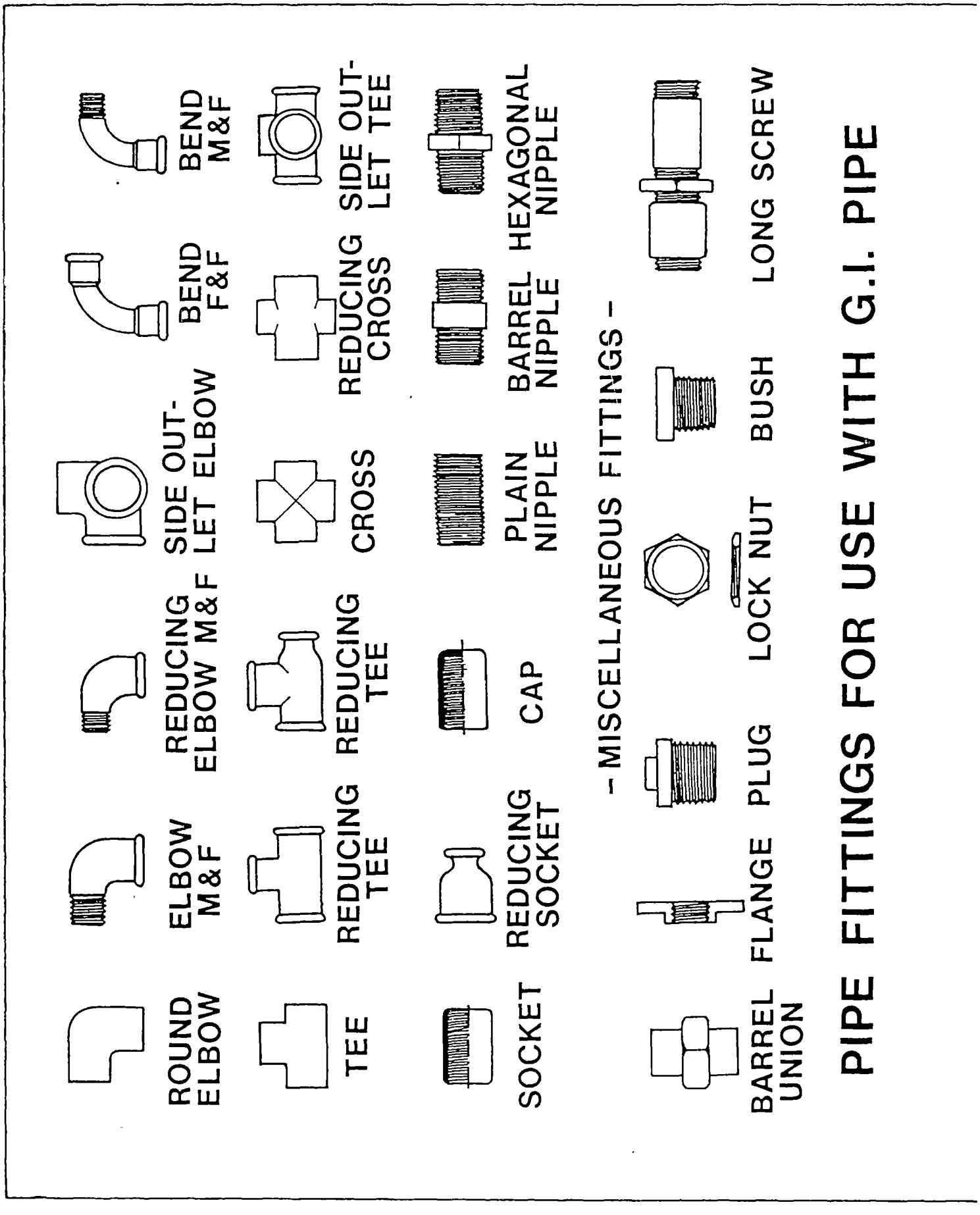
ROUND ELBOW
ELBOW M&F
REDUCING ELBOW M&F
SIDE OUT-LET ELBOW
BEND F&F
BEND M&F
TEE
REDUCING TEE
REDUCING TEE
CROSS
REDUCING CROSS
SIDE OUT-LET TEE
SOCKET
REDUCING SOCKET
CAP
PLAIN NIPPLE
BARREL NIPPLE
HEXAGONAL NIPPLE
- MISCELLANEOUS FITTINGS -
BARREL UNION
FLANGE
PLUG
LOCK NUT
BUSH
LONG SCREW
PIPE FITTINGS FOR USE WITH G.I. PIPE

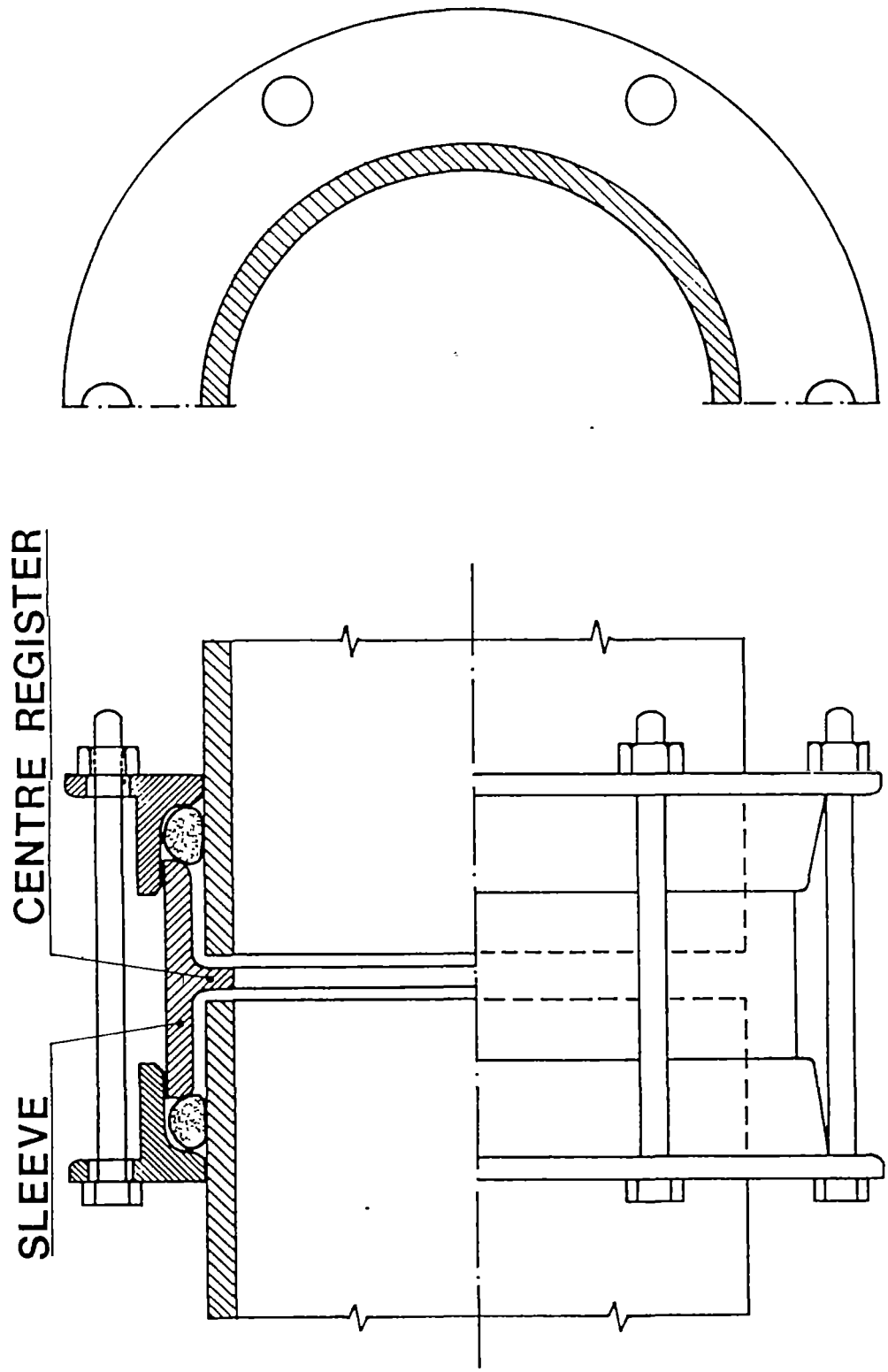

VIKING-JOHNSON COUPLING

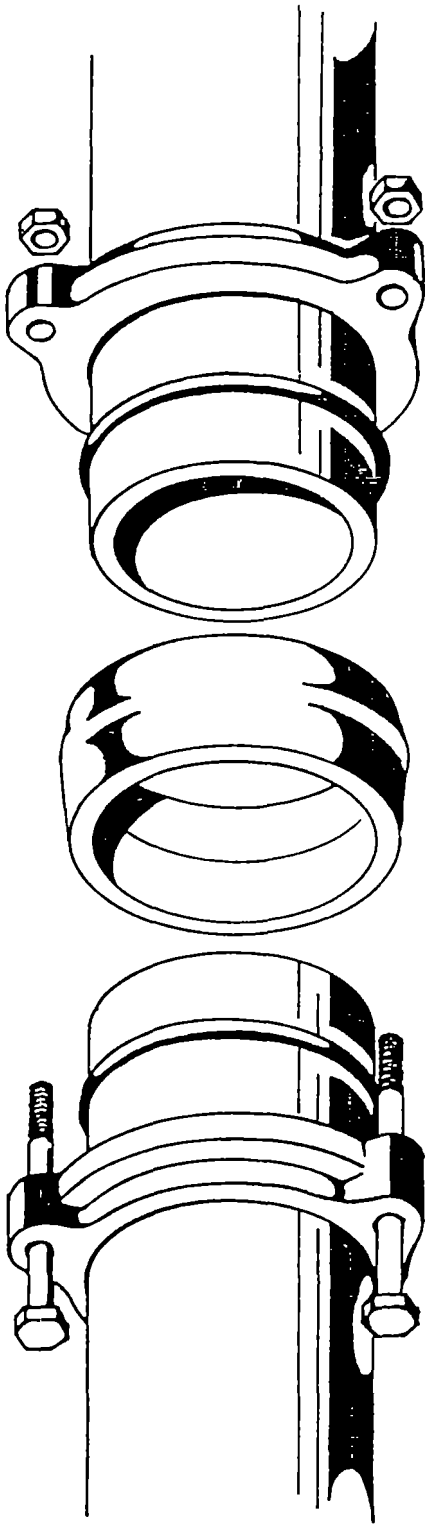

GIBAULT JOINT

Module : PIPE JOINTING CAST AND DUCTILE IRON PIPE	Code : TPC 164
	Edition : 20-09-1984
Section 1 : INFORMATION SHEET	Page : 01 of 01/10

Duration :	135 minutes.
Training objectives :	After the session the trainees will be able to : - list the three basic methods of jointing grey cast iron or ductile iron pipe; - use all three methods.
Trainee selection :	- Pipelayer; - Pipeline Inspector; - Construction Supervisor.
Training aids :	- Short lengths of Cast and Ductile Iron Pipe; - Push-on joints; - Flange joints; - Compression joints; - Levers; - Blocks; - Chain puller; - Lubricant; - Viewfoils : TPC 164/V 1-2; - Handout : TPC 164/H 1.
Special features :	- To be given after modules TPC 155 and TPC 156.
Keywords :	Pipe jointing/cast iron/ductile iron.

1. Introduction	
- There are three basic ways of jointing cast or ductile iron pipe: . push-on . compression . flanged.	Use whiteboard
2. Push-on joints	
- Good preparation of the joint is essential.	Demonstrate and explain method
- The correct procedure is : . insert gasket into socket; . lubricate the exposed area of the gasket, using manufacturer's lubricant; . mark depth of socket on spigot pipe; . insert spigot into socket as far as front of gasket; . align socket and spigot; . push spigot home into socket using either : a. lever; b. chain puller.	
- Divide trainees in groups.	Give length of pipe, push-on joints, lubricant, levers and chain pullers
- Do exercise (10 minutes).	Let trainees practice
3. Compression joints	
- There are many types of compression joints commercially available e.g.: . Bolted gland; . Gibault; . Viking Johnson.	Show models
- Each operates on the same basic principle of compressing a rubber gasket by means of tie-bolts.	Show V 1 (a-b)

- Some are single joints with a socket formed on the end of the pipe e.g. bolted gland, whilst others are double joints with a sleeve to joint two spigot ends together, e.g. Gibault, Viking Johnson.	
- Good preparation of the joint is essential	Demonstrate and explain method
- The correct procedure to be used for compression joints is : . mark depth of the socket on the spigot end of the pipe; . push collar and gasket over spigot end of the pipe; . insert spigot end of pipe into socket up to the mark; . align socket and spigot pipes; . push collar and gasket as far as possible towards the socket; . insert tie-bolts; . tighten tie-bolts in sequence in accordance with manufacturer's recommendations regarding torque;	Show V 2 Give flanged joints, and lengths of pipe
- Do exercise (15 minutes).	Give compression joints and lengths of pipe Let trainees practice
4. **Flanged joints**	
- Flanged joints are solid allowing no flexibility.	
- Good preparation of the joint is essential.	Demonstrate and explain method

- The correct procedure to be used for flanged joints is : . clean faces of the flanges to remove any traces of corrosion or high spots; . align bolt holes of the flanges; . insert bolts in holes; . tighten bolts in sequence, in accordance with manufacturer's recommendations regarding torque;	Show V 2
- Do exercise (15 minutes).	Give flanged joints, and lengths of pipe Let trainees practice
5. Safety - Safety measures are necessary because : . heavy pipes have to be handled and lifted; . pipe edges are sharp.	
6. Summary	Give H 1

Module : PIPE JOINTING CAST AND DUCTILE IRON PIPE	Code : TPC 164
	Edition : 20-09-1984
Section 3 : T R A I N I N G A I D S	Page : 01 of 01

Push-on joints TPC 164/V 1

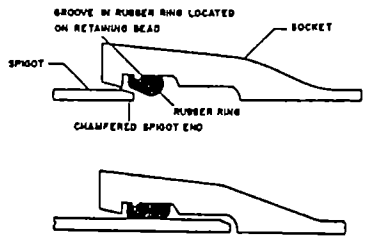

Bolt tightening sequence TPC 164/V 2

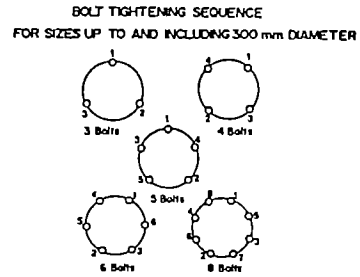

Pipe jointing cast and ductile iron pipe TPC 164/H 1

1. INTRODUCTION

Essentially there are three basic ways of jointing grey cast iron or ductile iron pipe :
a. push-on;
b. compression;
c. flange.
The choice of the type of joint is usually made by the engineer and based on the design criteria, availability and cost.

2. PUSH-ON JOINTS

The joint itself should be correctly prepared by first cutting the pipe to the correct length. The gasket is inserted into the recess of the socket after this has been cleaned first.

Fig. 1. Inserting rubber gasket into socket.

The manufacturer's lubricant should be used to lubricate the gasket, and the socket up to the depth marked on the spigot piece of pipe.

Insert the spigot into the socket as far as the gasket, taking care to align the socket and the spigot.
Finally the spigot should be pushed fully home into the socket using:
a. lever
b. chain puller

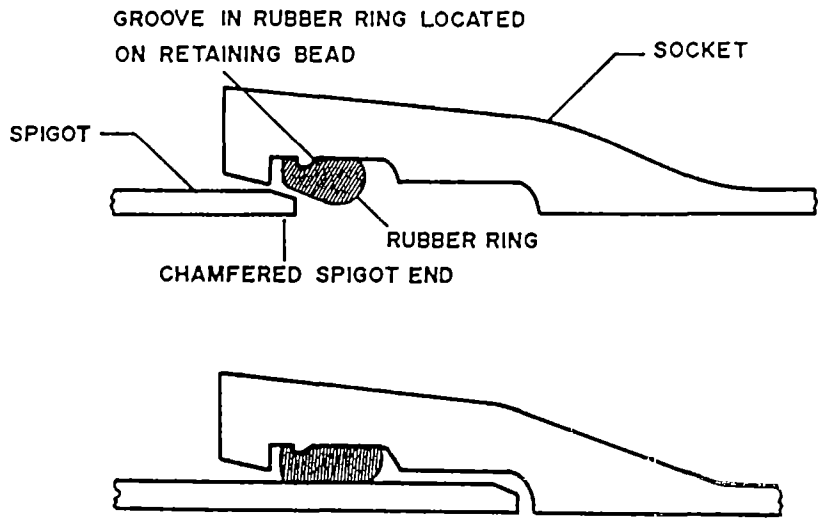

Fig. 2. Push-on joint (schematical).

3. COMPRESSION JOINTS

There are many varieties of compression joints available commercially :
a. Bolted gland;
b. Gibault;
c. Viking Johnson etc.

Each of these joints operates on the same basic principle of compressing a rubber gasket by means of tie bolts. Some are single joints with a socket formed on the end of the pipe, e.g. bolted gland. Others are double joints with a sleeve to join two spigot ends together e.g. Gibault, Viking Johnson.
The joint should be prepared correctly and the pipe cut to the correct length.

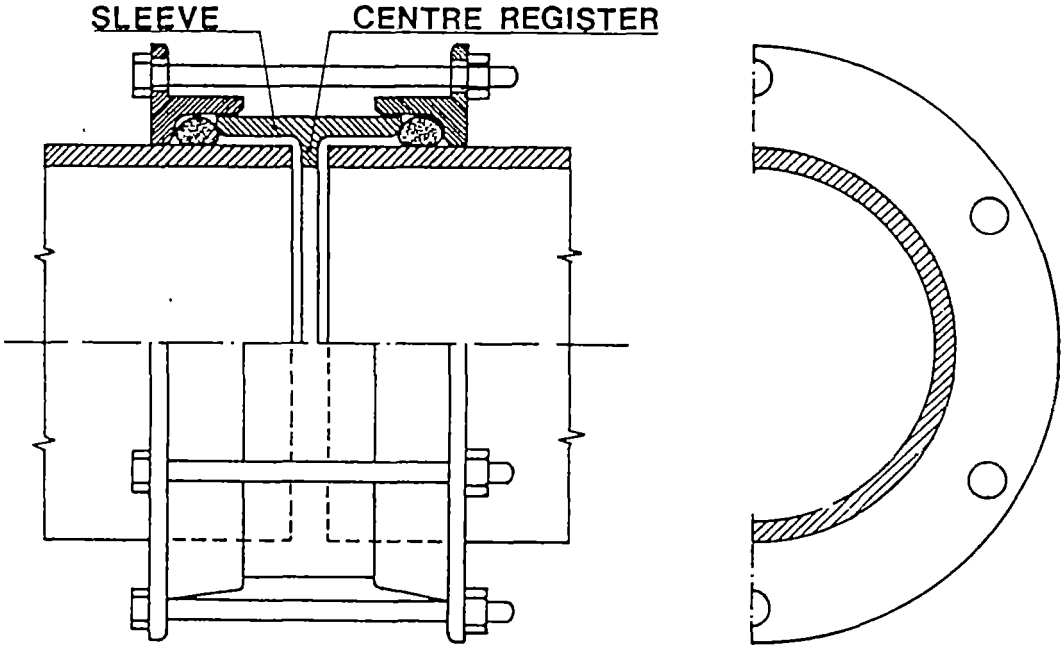

Fig. 3. Viking Johnson coupling

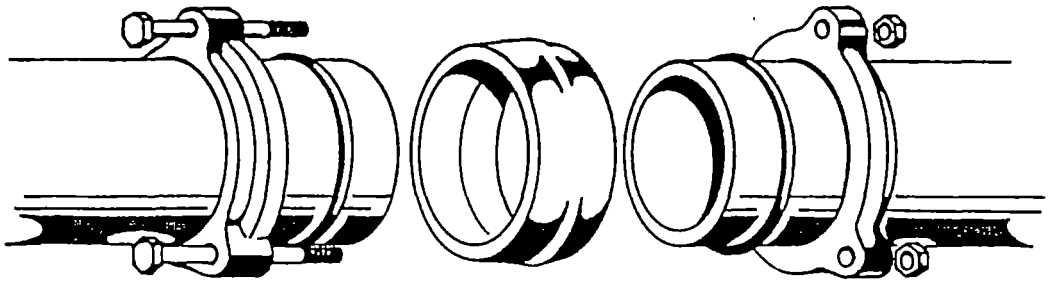

Fig. 4. Gibault joint.

Having marked the depth of the socket on the spigot, insert the end of the spigot into the socket up to the mark and align the socket and spigot. After pushing the collar and gasket as far as possible towards the socket, insert the tie bolts and tighten in sequence, in accordance with the torque as recommended by the manufacturer.

4. FLANGED JOINTS

Flanged joints are solid, allowing no flexibility at the joint. The face of the flanges must be cleaned thoroughly with a wire brush to remove any traces of corrosion or high spots. The gasket is inserted between the flange faces and the bolt holes on the flanges are aligned.
The bolts must then be tightened in the sequence and with the torque as recommended by the manufacturer.

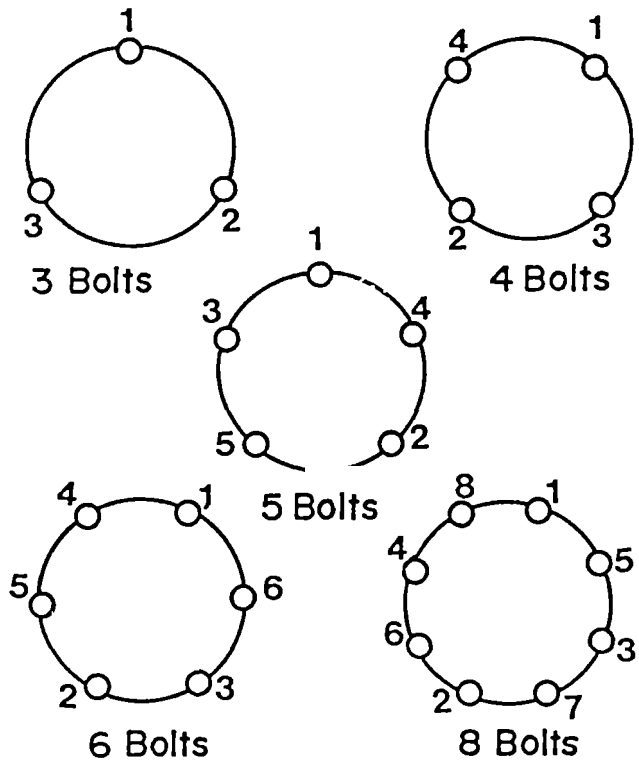

Fig. 5. Bolt tightening sequence (for sizes not larger than 300 mm).

5. SAFETY

Metal pipes are heavy, consequently care should be exercised when lifting and handling them. Also keep in mind that cut edges are extremely sharp and dangerous!

6. SUMMARY

There are three types of joints used on cast or ductile iron pipe :
a. push-on;
b. compression;
c. flanged.
Safety points should be noted whenever handling or using these types of joint.

* * *

TITLE :	CODE :
1. Push-on joints	TPC 164/V 1
2. Bolt tightening sequence	TPC 164/V 2

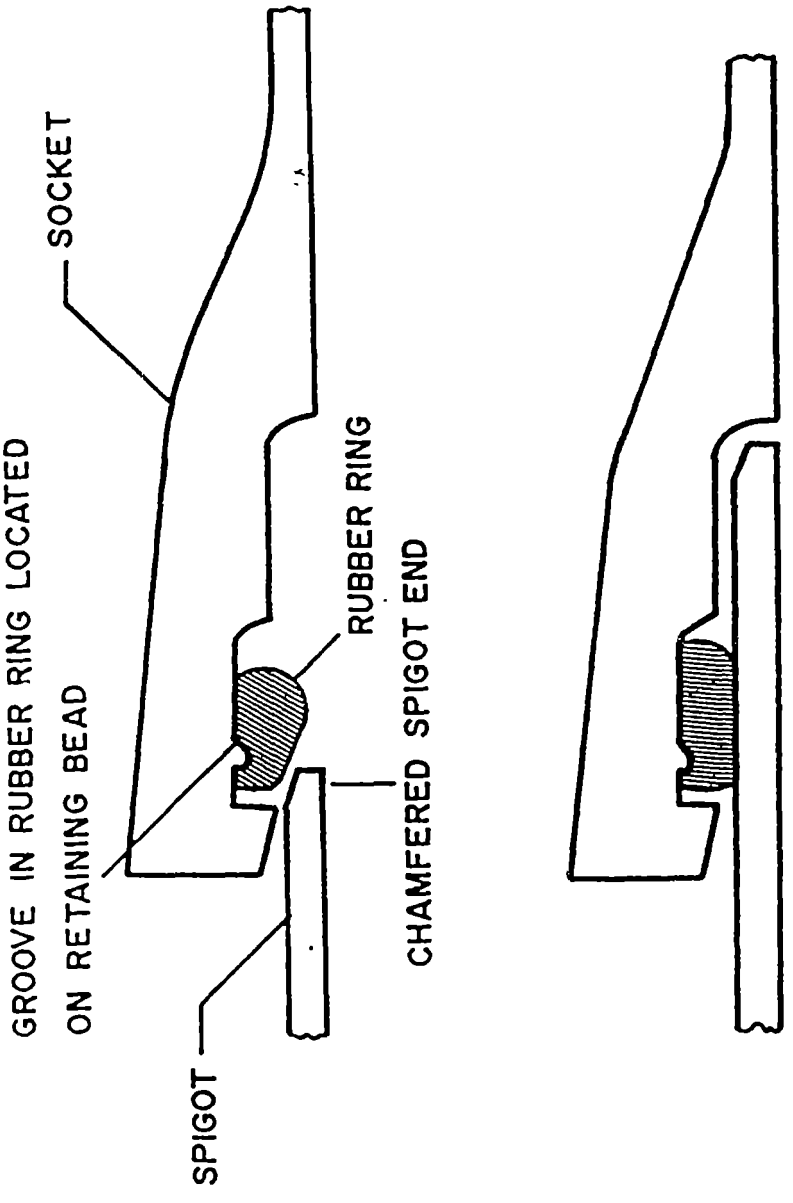
SOCKET
GROOVE IN RUBBER RING LOCATED
ON RETAINING BEAD
RUBBER RING
CHAMFERED SPIGOT END
SPIGOT

BOLT TIGHTENING SEQUENCE
FOR SIZES UP TO AND INCLUDING 300 mm DIAMETER

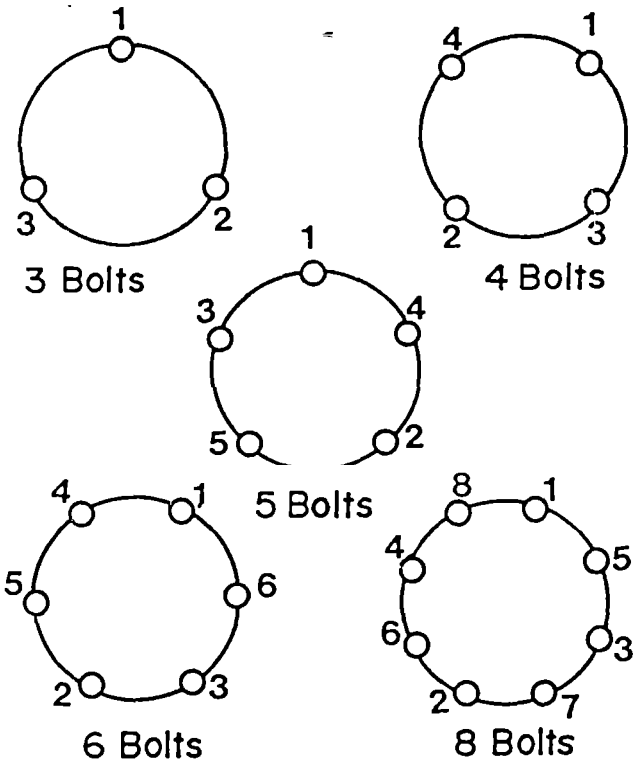

Module : INTRODUCTION TO MAINLAYING	Code : TPC 170
	Edition : 18-09-1984
Section 1 : INFORMATION SHEET	Page : 01 of 01/06

Duration	45 minutes.
Training objectives	After the session the trainees will be able to: - list the 6 basic aspects of mainlaying.
Trainee selection :	- Head of Section Distribution; - Head of Sub-section Distribution & Connections; - Pipelayer; - Pipeline Inspector; - Head of Sub-section Supervision; - Construction Supervisor.
Training aids :	- Viewfoil : TPC 170/V 1; - Handout : TPC 170/H 1.
Special features :	This module is designed as an introduction to a training course on mainlaying.
Keywords :	Mainlaying/introduction to mainlaying.

1. Introduction	
- There are essentially 6 areas in mainlaying: a. excavation, bedding and backfilling; b. setting out the line of the main; c. handling pipes; d. cutting and preparing pipes for jointing; e. jointing pipes; f. testing.	Show V 1
- Linking all these areas is safety.	
2. Excavation, bedding and backfilling	
- Important to do correct excavation, bedding and backfilling as this leads to less maintenance problems in the future.	
3. Setting out	
- Essential to set out line of main properly in order to plan the practical aspects of the job correctly.	
4. Handling and stacking pipes	
- Pipes should always be handled and stacked correctly: . to avoid damage; . for safety.	
5. Cutting and preparing pipes	
- Essential to cut pipes correctly to length to: . avoid wastage; . make good joints.	

6. **Jointing pipes** - Joints should always be made correctly in order to: . prevent leakage; . minimize maintenance.	
7. **Testing** - New mains should always be tested to check that mainlaying has been carried out correctly.	
8. **Safety** - Pipelaying can be dangerous as pipes are heavy and difficult to handle.	
9. **Summary**	Give H 1

Mainlaying TPC 170/V 1 MAINLAYING - Setting out - Excavation - Bedding - Pipe handling / stacking - Pipe cutting - Pipe jointing - Backfilling - Testing SAFETY !	-
	Introduction to main- laying. TPC 170/H 1

1. INTRODUCTION

There are essentially 6 areas in mainlaying:
a. excavation, bedding and backfilling;
b. setting out the line of the main;
c. handling pipes;
d. cutting and preparing pipes for jointing;
e. jointing pipes;
f. testing.

Linking all these areas is safety.

2. EXCAVATION, BEDDING AND BACKFILLING

It is important to carry out excavation, bedding and backfilling correctly as this leads to less maintenance problems in the future.

3. SETTING OUT

It is essential to set out the line of the main properly, in order to plan the practical aspects of the job correctly.

4. HANDLING AND STACKING PIPES

Pipes should always be handled and stacked correctly:
- to avoid damage;
- for safety.

5. Cutting and preparing pipes

It is essential to cut pipes correctly to length to:
- avoid wastage;
- make good joints.

6. JOINTING PIPES

Joints should always be made correctly in order to:
- prevent leakage;
- minimize maintenance.

7. TESTING

New mains should always be tested to check that mainlaying has been carried out correctly.

8. SAFETY

Pipelaying can be dangerous as pipes are heavy and difficult to handle.

9. SUMMARY

There are 6 important aspects in mainlaying:
a. excavation, bedding and backfilling;
b. setting out line of pipes;
c. handling pipes;
d. cutting and preparing pipes;
e. jointing pipes;
f. testing.

At all times safety precautions should be taken.

* * *

TITLE :	CODE :
1. Mainlaying	TPC 170/V 1

MAINLAYING

- Setting out
- Excavation
- Bedding
- Pipe handling / stacking
- Pipe cutting
- Pipe jointing
- Backfilling
- Testing

SAFETY !

Module : MAINLAYING SAFETY	Code : TPC 179
	Edition : 18-09-1984
Section 1 : INFORMATION SHEET	Page : 01 of 01/04

Duration :	45 minutes
Training objectives :	After the session the trainess will be able to: - name the 2 main areas of safety; - list the components of protective clothing; - list the aspects involved in safety of others.
Trainee selection :	- Head of Section Distribution; - Head of Sub-section Distribution & Connections; - Pipelayer; - Pipeline Inspector; - Head of Sub-section Supervision; - Construction Supervisor.
Training aids :	- Gloves; - Boots; - Overalls; - Safety hats; - Eye protector; - Viewfoil : TPC 179/V 1; - Handout : TPC 179/H 1.
Special features :	-
Keywords :	Mainlaying safety/safety clothing.

Module : MAINLAYING SAFETY	Code : TPC 179
	Edition : 18-09-1984
Section 2 : S E S S I O N N O T E S	Page : 01 of 01

1. **Introduction**	
- Safety is relevant to two areas: a. personal safety; b. the safety of others.	Show V 1
2. **Personal safety**	
- Use of protective clothing: a. boots b. overalls c. gloves d. hats e. eye protectors.	Show protective clothing and demonstrate its use
- Correct use of tools and equipment.	
3. **Safety of others**	
- Tools and equipment left in dangerous places. - Obstructions to pedestrians and traffic. - Storage of dangerous materials. - Excavations. - Flooding due to discharge of water. - Use of equipment and machines.	
4. **Summary**	Give H 1

Safety TPC 179/V 1

SAFETY

- For oneself
- For others

Mainlaying safety TPC 179/H 1

1. INTRODUCTION

Safety is relevant to two areas:
a. personal safety;
b. the safety of others.

2. PERSONAL SAFETY

Use of protective clothing:
a. boots
b. overalls
c. gloves
d. hats
e. eye protectors.

Correct use of tools and equipment.

3. SAFETY OF OTHERS

Tools and equipment left in dangerous places.
Obstructions to pedestrians and traffic.
Storage of dangerous materials.
Excavations.
Flooding due to discharge of water.
Use of equipment and machines.

4. SUMMARY

Personal safety;
Safety of others.

* * *

TITLE :	CODE :
1. Safety	TPC 179/V 1

SAFETY

- For oneself
- For others

Module : PRESSURE TESTING PIPES	Code : TPC 180
	Edition : 20-09-1984
Section 1 : INFORMATION SHEET	Page : 01 of 01/06

Duration :	90 minutes.
Training objectives :	After the session the trainees will be able to: - describe the method for carrying out a pressure test; - carry out such a test.
Trainee selection :	- Pipeline Inspector; - Construction Supervisor; - Head of Sub-section Distribution & Connections.
Training aids :	- Water main; - Pressure pump; - Pressure gauges; - Viewfoils : TPC 180/V 1-2; - Handout : TPC 180/H 1.
Special features :	-
Keywords :	Pressure testing / pipe testing.

1. Introduction

- Testing is necessary on all new water mains to ensure that :
  . the pipe is sound;
  . the joints are watertight.

- Testing involves
  . applying a measured pressure to a water main;
  . observing the ability of that main to maintain the pressure over a given period of time.

- The most commonly used method is to increase the pressure in a new water main to 1.5 TIMES THE NORMAL WORKING PRESSURE and to maintain this for a minimum period of 2 HOURS.

- If there is a drop in pressure during this period the main is pressurised again to the original test pressure and the amount of additional water required is measured.

- Certain pipe materials (cement lining, concrete, AC) absorb water themselves. To avoid wrong conclusions : pre-pressurize during at least 24 hours, until saturation takes place.

Show V 1

- After completion of actual test phase, compare amount of additional water with following calculation :

ALLOWABLE LOSSES IN LITRES PER HOUR

Show V 2

$Q = (d\sqrt{p})/100L$ for iron, steel and uPVC pipe

$Q = (d\sqrt{p})/60L$ for AC pipe

Where : Q = allowable loss in litres per km of pipeline and per hour during the testing phase d = internal diameter of pipe in mm p = pressure in kg/cm^2 L = average pipe length in m Note : L is the average length of the <u>individual</u> pipes used e.g. 4, 6 or 10 m.	
2. Method of testing	
- Ensure that the pipe to be tested is sealed at each end .	Explain and demonstrate
- The method of testing is: . connect test pump to pipe (Usually by means of a service connection ferrule); . pump pressure up to 1.5 times normal working pressure; . leave for 2 hours; . periodically check pressure gauge; . let trainees practice.	
- After 2 hours, if the pressure has dropped, re-pressurize the main to the original pressure (1.5 times normal working pressure).	Explain remaining activities
- Measure the amount of additional water needed to re-pressurize.	
- Calculate the acceptable loss of water from the formula and compare with the actual loss.	
- Investigate the cause of abnormal losses, if these occur.	
3. Summary	Give H 1

Module : PRESSURE TESTING PIPES	Code : TPC 180
	Edition : 20-09-1984
Section 3 : T R A I N I N G A I D S	Page : 01 of 01

Pre-pressurization TPC 180/V 1

PRE-PRESSURIZATION
FOR
WATER ABSORBING MATERIALS

- CONCRETE
- A.C.
- CEMENT LINING

- PRE-PRESSURIZE FOR ≥ 24 HOURS
- 1.5 × WORKING PRESSURE

Pressure testing TPC 180/V 2

PRESSURE TESTING

1. TEST PRESSURE = 1.5 × WORKING PRESSURE
2. DURATION AT LEAST 2 HOURS
3. ALLOWABLE LOSSES :

A.C. PIPES : $Q = \frac{d\sqrt{p}}{60\ L}$

OTHER PIPES : $Q = \frac{d\sqrt{p}}{100\ L}$

Pressure testing pipes TPC 180/H 1

1. INTRODUCTION

Testing is necessary on all new water mains to ensure that :
a. the pipe is sound;
b. the joints are watertight.

Testing involves applying a measured pressure to a water main and then observing the ability of that main to maintain the pressure over a given period of time. A larger loss of pressure would normally indicate that water is lost or that the pipe material is expanding abnormally.

Certain pipe materials, however, such as (prestressed) concrete or asbestos cement, will absorb water until the material is saturated with it. Although this does not mean that anything undesirable is happening, it will result in a loss of pressure. To avoid confusion, therefore, it is common practice to pressurize pipes of such materials during a preparatory phase first, until the absorption of water by the pipe material has come to an end. Any further losses in pressure are then no longer the result of absorption of water by the pipe material itself.

The preparatory phase involves applying a test pressure of 1.5 times the normal working pressure for at least 24 hours.

For the actual pressure test itself, the most commonly used method is to increase the pressure in the new water main to :

1.5 TIMES THE NORMAL WORKING PRESSURE

and to mantain this for a minimum period of

2 HOURS

If there is a drop in pressure during this period the main is pressurized again to the original test pressure and the amount of additional water required is measured.

This amount of additional water (or losses from the first pressurization) is compared with the following calculation.

Allowable losses in litres per hour, per km

$Q = (d\sqrt{p})/100L$ for iron, steel and uPVC pipe

$Q = (d\sqrt{p})/60L$ for AC pipe

Where :
Q = allowable loss in litres per km of pipeline and per hour, during the testing phase;
d = internal diameter of pipe in mm;
p = pressure in kg/cm^2;
L = average length of the individual pipes, in m (e.g. 4, 6, 10 m, etc.).

2. METHOD OF TESTING

Ensure that the pipe to be tested is sealed at each end.
Connect test pump to pipe. This is usually done by means of a service-connection ferrule.
Pump pressure up to 1.5 times normal working pressure.
Leave for 2 hours.
Periodically check pressure gauge.
After 2 hours, if the pressure has dropped, re-pressurize the main to the original pressure (1.5 times normal working pressure).
Measure the amount of additional water needed to re-pressurise.
Calculate from the formula the acceptable loss of water and compare with the actual loss measured. Investigate the cause of any excessive loss of water.

3. SUMMARY

- Pipe and joints are checked by applying overpressure and checking any decrease in pressure with time.

- Certain pipe materials absorb water and need to be pre-pressurized first.

- Pressurization normally is to 1.5 times normal working pressure and for at least 2 hours.

* * *

TITLE :	CODE :
1. Pre-pressurization	TPC 180/V 1
2. Pressure testing	TPC 180/V 2

PRE-PRESSURIZATION FOR WATER ABSORBING MATERIALS

- CONCRETE
- A.C.
- CEMENT LINING

* PRE-PRESSURIZE FOR ≥ 24 HOURS
* 1.5 × WORKING PRESSURE

PRESSURE TESTING

1. TEST PRESSURE = 1.5 × WORKING PRESSURE
2. DURATION AT LEAST 2 HOURS
3. ALLOWABLE LOSSES :

A.C. PIPES : $Q = \frac{d\sqrt{p}}{60\ L}$

OTHER PIPES : $Q = \frac{d\sqrt{p}}{100\ L}$

Module : TAPPING MAINS	Code : TPC 190
	Edition : 18-09-1984
Section 1 : INFORMATION SHEET	Page : 01 of 01/08

Duration :	135 minutes.
Training objectives :	After the session the trainees will be able to : - tap water mains for connecting to service pipes.
Trainee selection :	- Head of Sub-section Distribution & Connections; - Pipelayer; - Pipeline Inspector.
Training aids :	- Water main; - Tapping machines; - Clamp saddles; - Ferrules; - Viewfoils : TPC 190/V 1-4; - Handout : TPC 190/H 1.
Special features :	-
Keywords :	Tapping mains/Tapping under pressure/dry tapping/self-tapping ferrules.

Module : TAPPING MAINS	Code : TPC 190
	Edition : 18-09-1984
Section 2 : S E S S I O N N O T E S	Page : 01 of 01

1. **Introduction**	
- Water mains are tapped to provide a connection between the water main and the service pipe to a consumer.	Show V 1
- They are tapped under two conditions: a. under pressure; b. dry (not under pressure).	
2. **Tapping under pressure**	
- The sequence of tapping under pressure is:	Show equipment Demonstrate Show V 2-4
. clamp under-pressure-tapping machine to the water main; . insert the ferrule and drill; . clamp turret in position; . drill and tap main; . withdraw drill; . rotate turret head through 180°; . insert ferrule by screwing; . seal ferrule with plug; . remove tapping machine from main.	
	Let trainees practice
4. **Self-tapping ferrules**	
- Can be used under pressure or dry	Show self-tapping ferrule Demonstrate
- The sequence for self-tapping ferrules : . connect saddle and ferrule to main; . rotate ferrule to cut and tap hole; . withdraw tapping plug to tap of ferrule by screwing.	Let trainees practice
5. **Summary**	Give H 1

Module : TAPPING MAINS	Code : TPC 190
	Edition : 18-09-1984
Section 3 : T R A I N I N G A I D S	Page : 01 of 01

Service connection assembly TPC 190/V 1

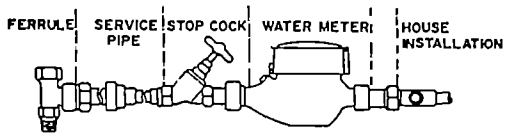

TYPICAL SERVICE CONNECTION ASSEMBLY

Tapping equipment I TPC 190/V 2 (a-b)

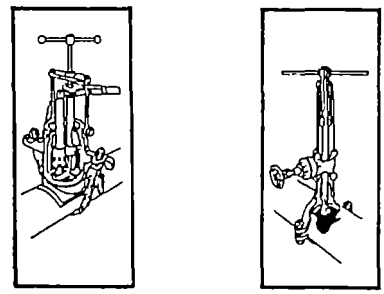

FOR AC/STEEL FOR uPVC

UNDER PRESSURE TAPPING EQUIPMENT

Tapping equipment TPC 190/V 3

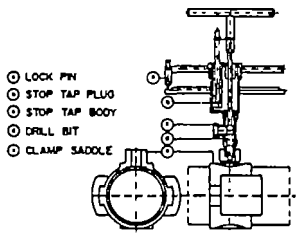

EQUIPMENT FOR TAPPING UNDER PRESSURE
(uPVC PIPE)

Dry tapping equipment TPC 190/V 4

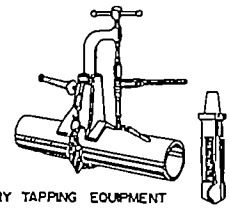

DRY TAPPING EQUIPMENT

Tapping mains TPC 190/H 1

1. INTRODUCTION

Water mains are tapped to allow a connection to be made from the Water Enterprise's water main to the service pipe which provides water to the consumer.
When a main is tapped it is either full of water under pressure or empty. Consequently tapping machines are designed to tap water mains
a. under pressure, or
b. dry.

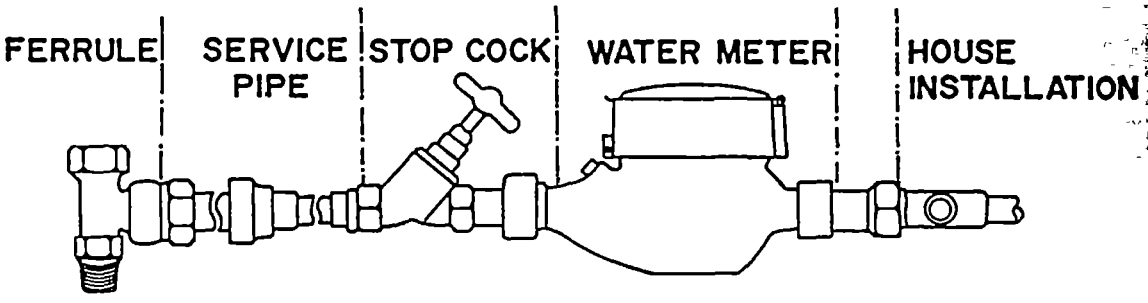

Fig. 1. Typical service connection

2. TAPPING UNDER PRESSURE

A tapping machine for use under pressure is essentially a water tight chamber within which there are a drill and a ferrule that are attached to a rotating turret at the top of the chamber.

The machine is clamped to the main and the drill rotated to drill a hole and tap the same hole.

The turret head is then roated over 180° to allow the ferrule to be screwed into this hole.

There are different tapping machines, for use with AC or steel pipes (see Fig. 2), or with uPVC pipes (see Fig 3).

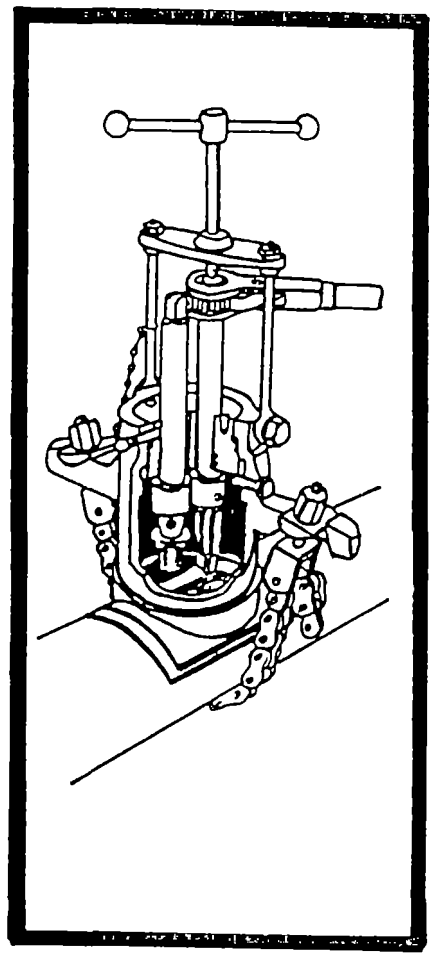

Fig. 2. Equipment to tap A.C./steel pipes under pressure

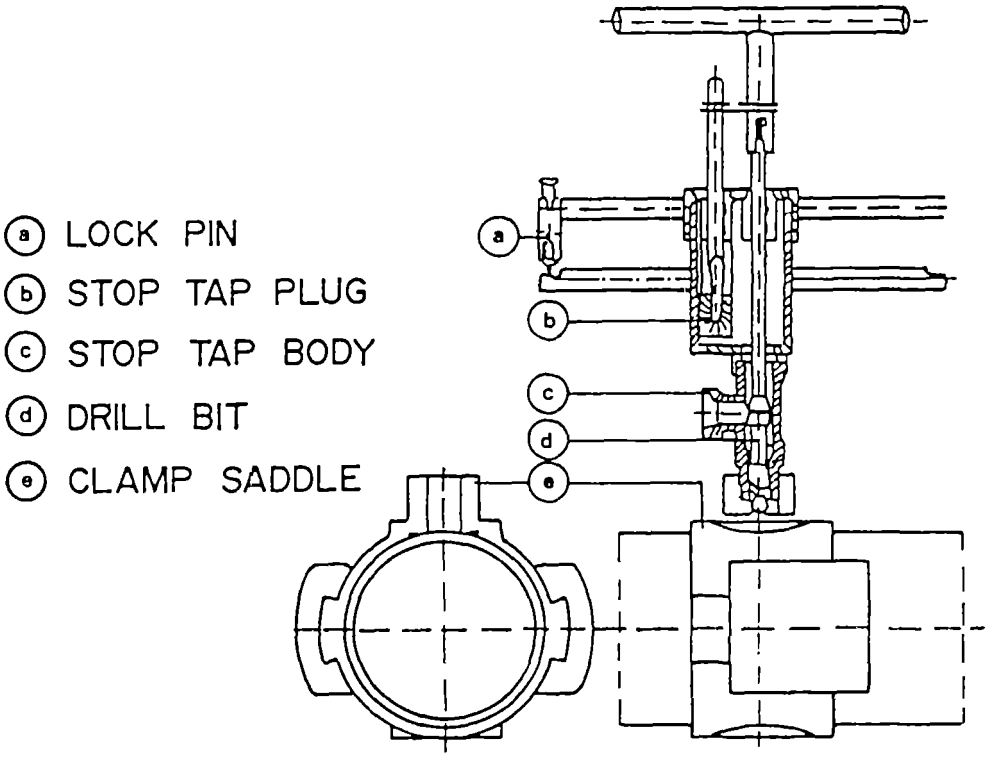

Fig. 3. Equipment for tapping uPVC pipes under pressure

3. DRY TAPPING

When a water main is not under pressure (usually before commissioning) tappings can be made with a dry tapping machine.
This is essentially a drill tap machine which is clamped to the water main. A hole is simultaneously drilled and tapped, after which the ferrule is inserted.

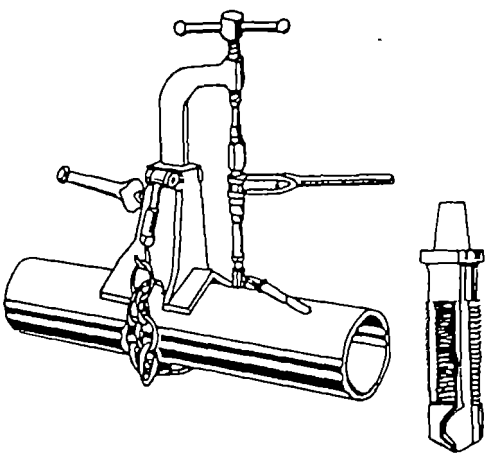

Fig. 4. Dry tapping equipment

4. SELF-TAPPING FERRULES

This is a type of ferrule which drills and taps the hole in the main by incorporating a drill and tap with the ferrule itself.
They may be used either under pressure or dry.
The ferrule is normally used with a tapping saddle.

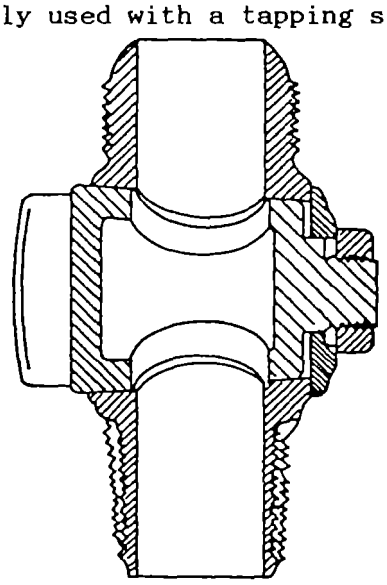

Fig. 5. Self-tapping ferrule

5. SUMMARY

Water mains are tapped to provide a connection from the Water Enterprise's main to the service pipe.
They are tapped under two conditions :
a. under pressure;
b. dry.

There are also self-tapping ferrules which may be used either under pressure or not.

* * *

TITLE :	CODE :
1. Service connection assembly	TPC 190/V 1
2. Tapping equipment (I)	TPC 190/V 2
3. Tapping equipment (II)	TPC 190/V 3
4. Dry tapping equipment	TPC 190/V 4

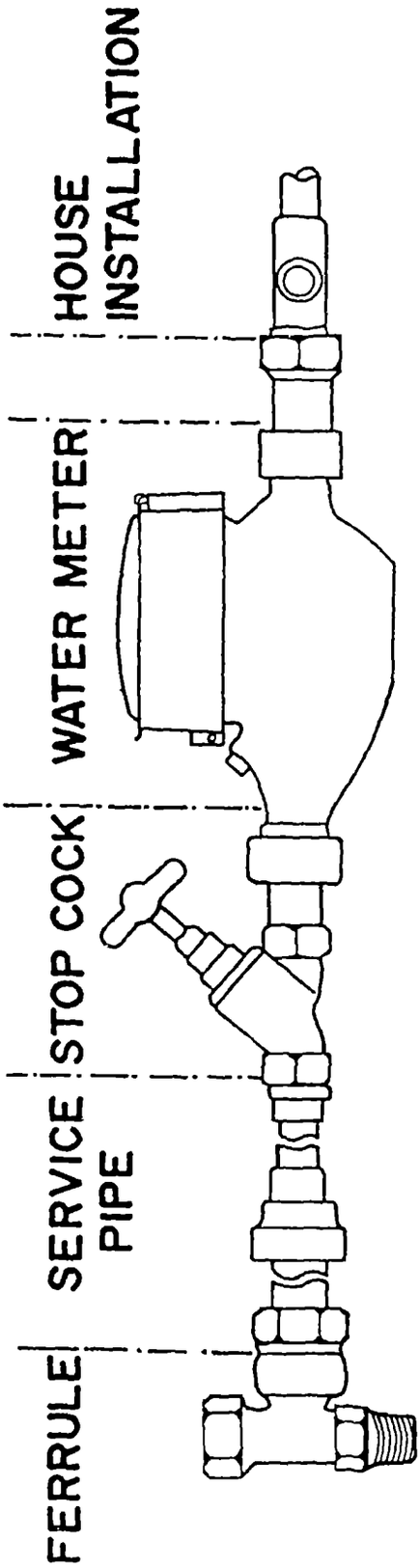

TYPICAL SERVICE CONNECTION ASSEMBLY

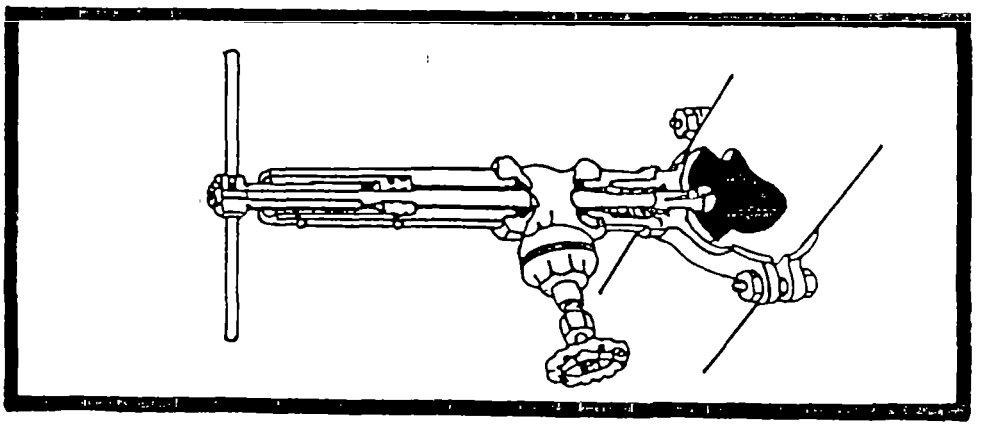

FOR uPVC

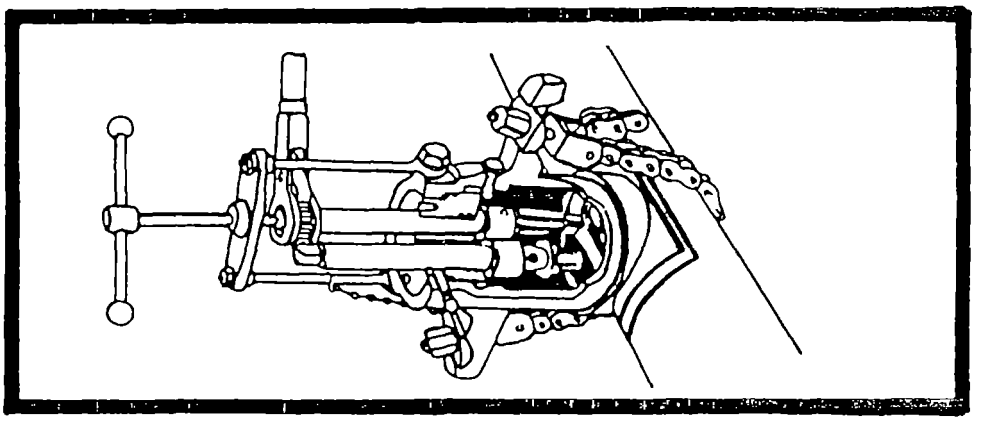

FOR A.C / STEEL

UNDER PRESSURE TAPPING EQUIPMENT

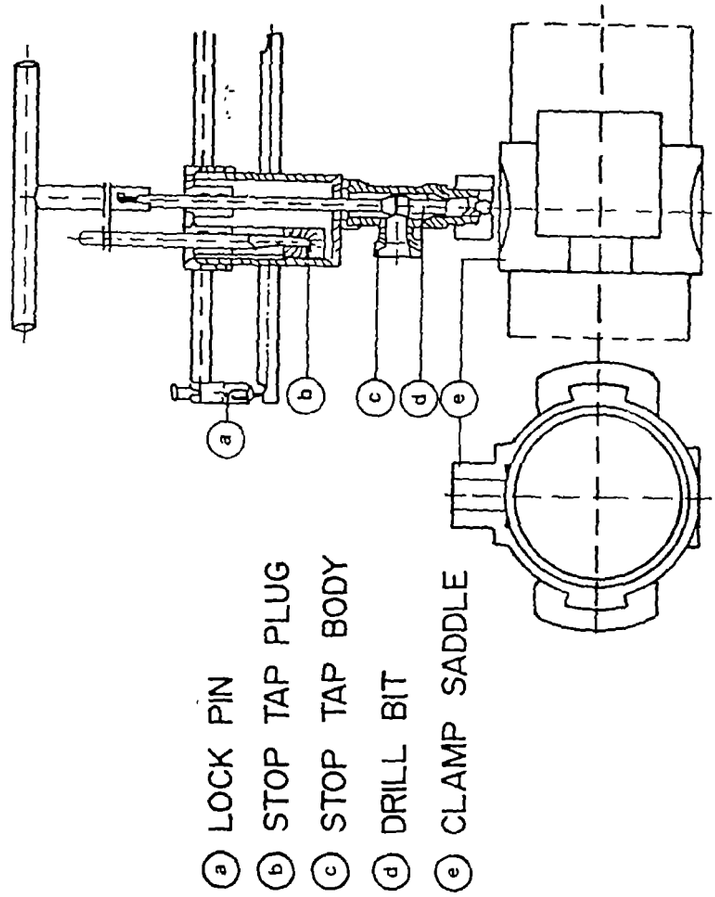

EQUIPMENT FOR TAPPING UNDER PRESSURE
(uPVC PIPE)

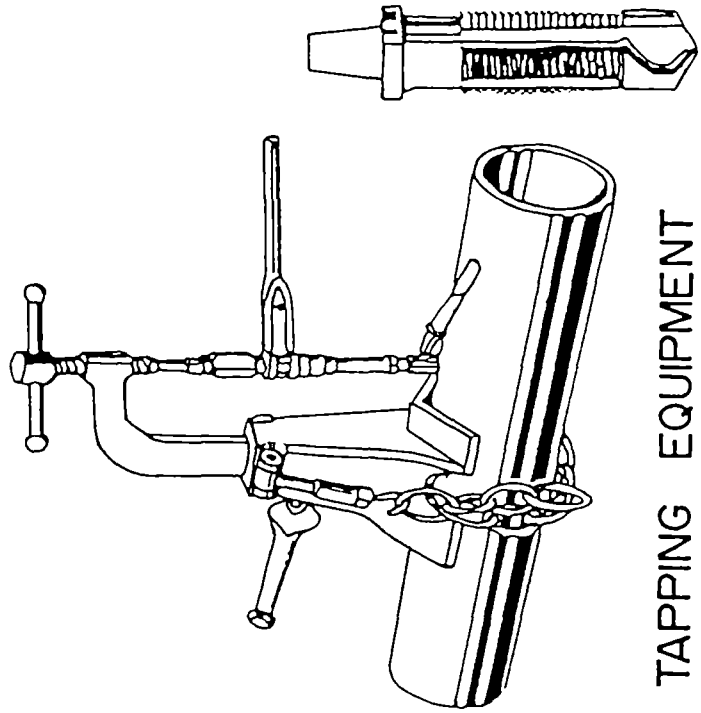

DRY TAPPING EQUIPMENT